NSTXU

TF Coupled Thermal Electromagnetic Diffusion Analysis (Rev 1)

NSTXU-CALC-132-05-01

Sept 4, 2009

Prepared By:

Han Zhang, PPPL Mechanical Engineering

Reviewed By:

YuHu Zhai,

Approved By:

J. Chrzanowki, Cognizant Engineer

Part I

Executive Summary

The objective of this analysis is to calculate the temperature and stresses during TF coil ramp up, flat top and ramp down (Fig. 1). PF field is not considered. This analysis is based on the coupled field electromagnetic and thermal analysis for a simple model by P. Titus [1], [2].

The distribution of current in TF coil depends on the resistance, inductance and contact pressure in the contact area. Coil temperature reaches highest at the end of the pulse, i.e., 10.136s for normal operation. Maximal temperature is 117ºC, at the inner side of arch and inner TF leg. Comparing with C. Neumeyer's result (101 ºC temperature rise [3]) this analysis with current diffusion effect results in a little higher temperature. But within this temperature range, active cooling is not necessary. Max coil temperature is 47 ºC in TF outer coil at the end of pulse. But the temperature at the end of the coil can reach 65 ºC because it connects to the arch which has higher temperature.

In this model, the arch is modeled by two solid pieces. But in reality, they are made of many straps. So the arches in this model have anisotropic material properties (mechanical properties are based on the local structure model results of T. Willard [4]), Current density, magnetic flux density and temperature from this analysis have been provided to T. Willard for his detailed simulation of the joint.

Using high strength copper (80% IACS) in the flag extension increases the temperature only by < 1ºC. Thus high strength copper can be used if required to increase the pressure of joint bolt insert over the capacity of pure copper.

The central beam has maximal hoop tension stress of 72.7MPa at 9.512s (i.e. the end of flat top) and 58.5MPa at 10.136s (i.e. the end of pulse), similar to Titus's result [2]. But there is another even higher hoop stress point of 95.5MPa at 9.512s, at the connection between central beam and flag, which is due to the L-shape connection part between the arch and TF outer leg.

Toroidal field contours have been provided for use in other calculations—in particular the background field in the antenna calculation.

Structure response at the joint has been included for comparison with more detailed modeling of the joint [4].

Figure 1: NSTX normal operation waveform.

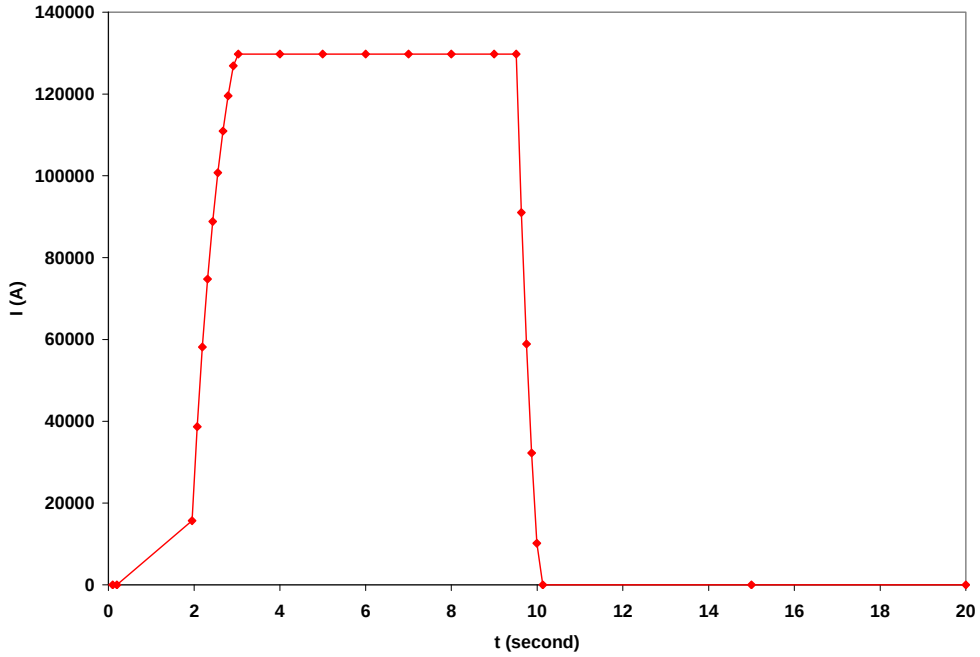

Table of Contents

List of Figures 5
List of Tables 5
List of References 5
Modeling 6
Comparison of using high strength copper and pure copper 8
Temperature rise 12
Coil deformation 13
Coil deformation 14
Contact pressure 17
Coil stresses 18
Coil stresses 19
Current density, temperature and toroidal field in the arch area 21
Appendix 24

List of Figures

Figure 1: NSTX normal operation waveform. 4
Figure 2: Electromagnetic model. 6
Figure 3: Thermal and structural model. 7
Figure 4: Comparison of using pure copper and high strength copper as flag material. 9
Figure 5: Temperature (K) in the coil. 12
Figure 6: Time history plot of temperature (K). 12
Figure 7: Time history plot of temperature (K). 13
Figure 8: Coil deformation (m). 14
Figure 9: The L-shape connection results in the theta deformation. 16
Figure 10: Time history plot of joint displacement Ux and Uz (m). 17
Figure 11: Stress in contact regions (Pa). 18
Figure 12: Coil Von Mises stress (Pa) 19
Figure 13: Close view of Von Mises stress (Pa). 19
Figure 14: Hoop stress (Pa). 21
Figure 15: Current density (A/m^2). 22
Figure 16: Temperature (K). 23
Figure 17: Toroidal field estimation. 23

List of Tables

Table 1: Contact resistance data [5]. 8

List of References

[1] Peter Titus, "Coupled Electromagnetic-Thermal Analysis (04072009)", *NSTX-CALC-132-01-00*, 2009.

[2] Peter Titus, "Coupled Electromagnetic-Thermal Analysis (04202009)", NSTX-CALC-132-02-00, 2009.

[3] Charles L. Neumeyer, http://www.pppl.gov/~neumeyer/NSTX_CSU/Design_Point.html, dated 7-29-2009.

[4] Tom Willard, "TF Flex Joint and TF Bundle Stub", NSTX-CALC-132-06-00, 2009.

[5] Robert D. Woolley, "TF Joint Pressure VS Temperature In NSTX CSU Upgrade", CSU-CALC-132-090211-RDW-01, 2009.

Modeling

This is a transient and coupled field analysis. An electromagnetic model (Fig. 2) is used to calculate current diffusion effect and transfer the generated heat and Lorenz force to thermal and structural model. The thermal and structural model calculates the temperature, displacement, thermal stress, contact pressure at contact areas, and then transfer these data back to electromagnetic model. The materials have temperature dependent material properties, including electrical resistivity, thermal conductivity, specific heat, coefficients of thermal expansion. The arches have anisotropic resistivity and thermal conductivity to simulate the straps. Because the arch is made of many straps and not a solid copper, it becomes much more compliant. The modulus of the arch is estimated to be half of that of pure copper. The upper flag uses high strength copper which has 1/0.8 resistivity and 80% thermal conductivity of pure copper. In next section, the results show that using high-strength copper or pure copper doesn't have much difference. The lower flag uses pure copper. In the electromagnetic model, the contact regions have pressure dependent resistivity and the data are from R. Woolley [5] (Table 1).

Figure 2: Electromagnetic model.

A. Model

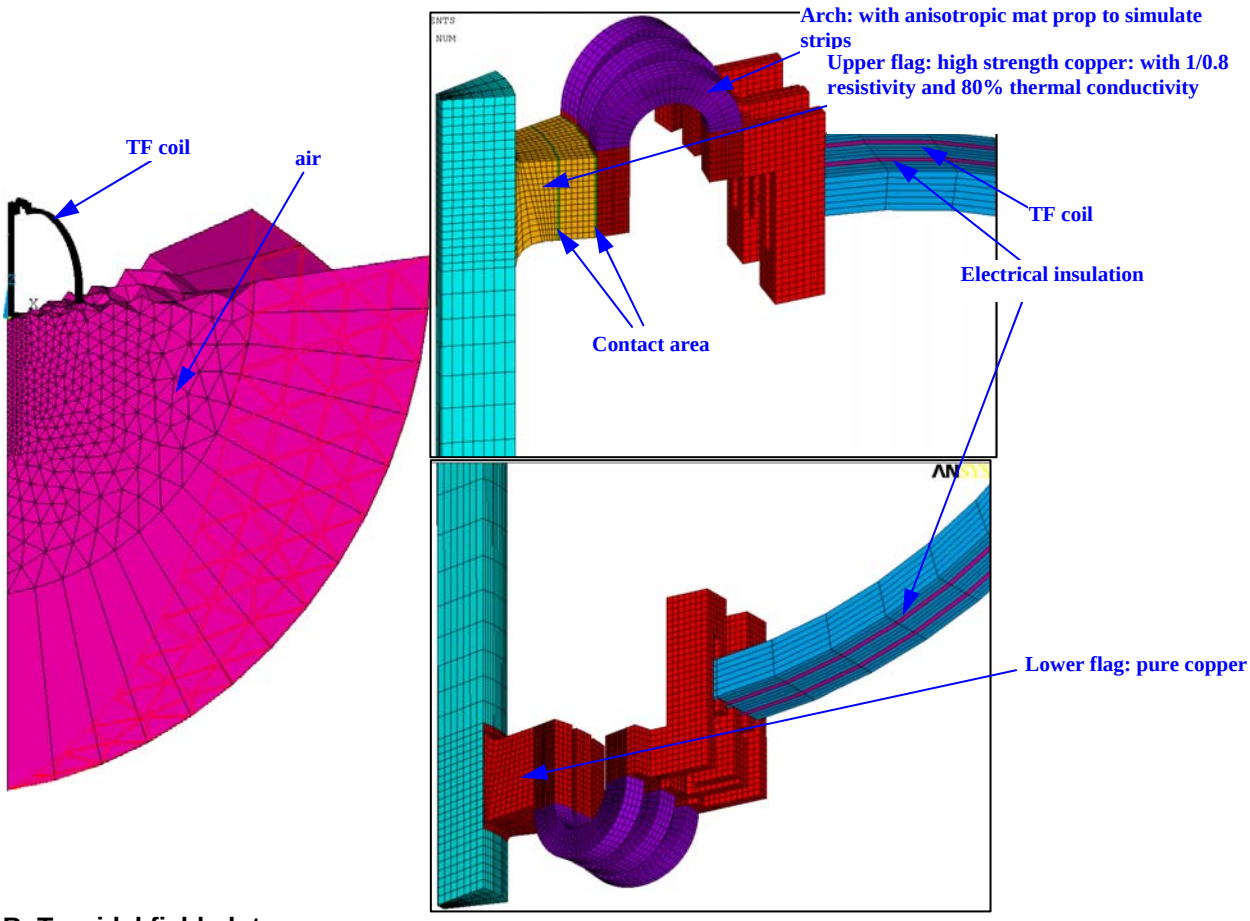

B. Toroidal field plot

t=8s, flat top, Toroidal field (T)

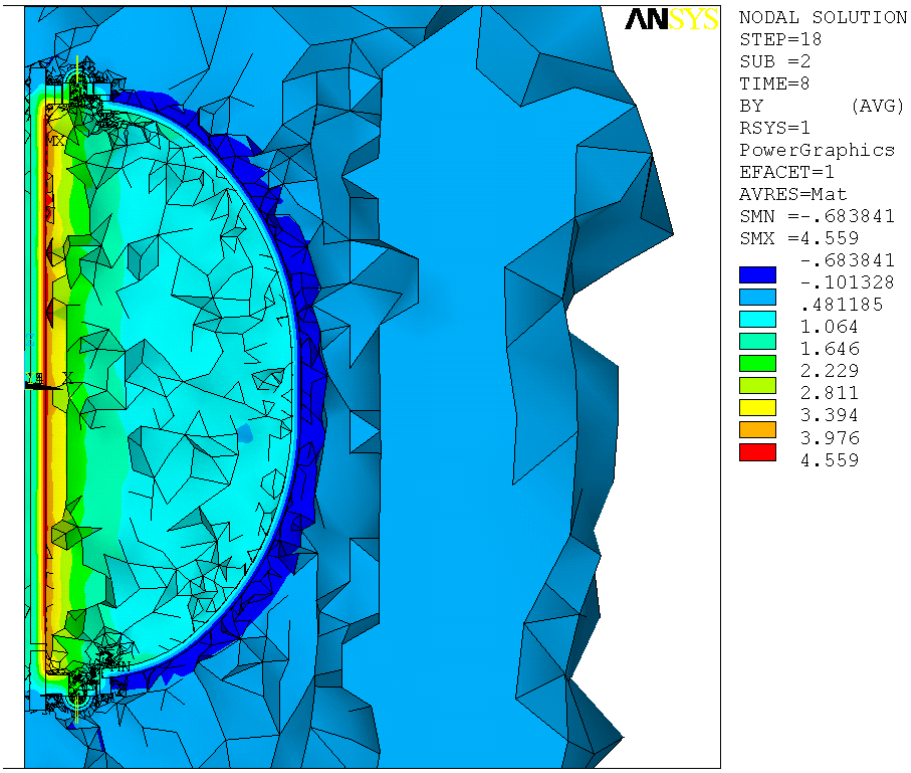

Figure 3: Thermal and structural model.

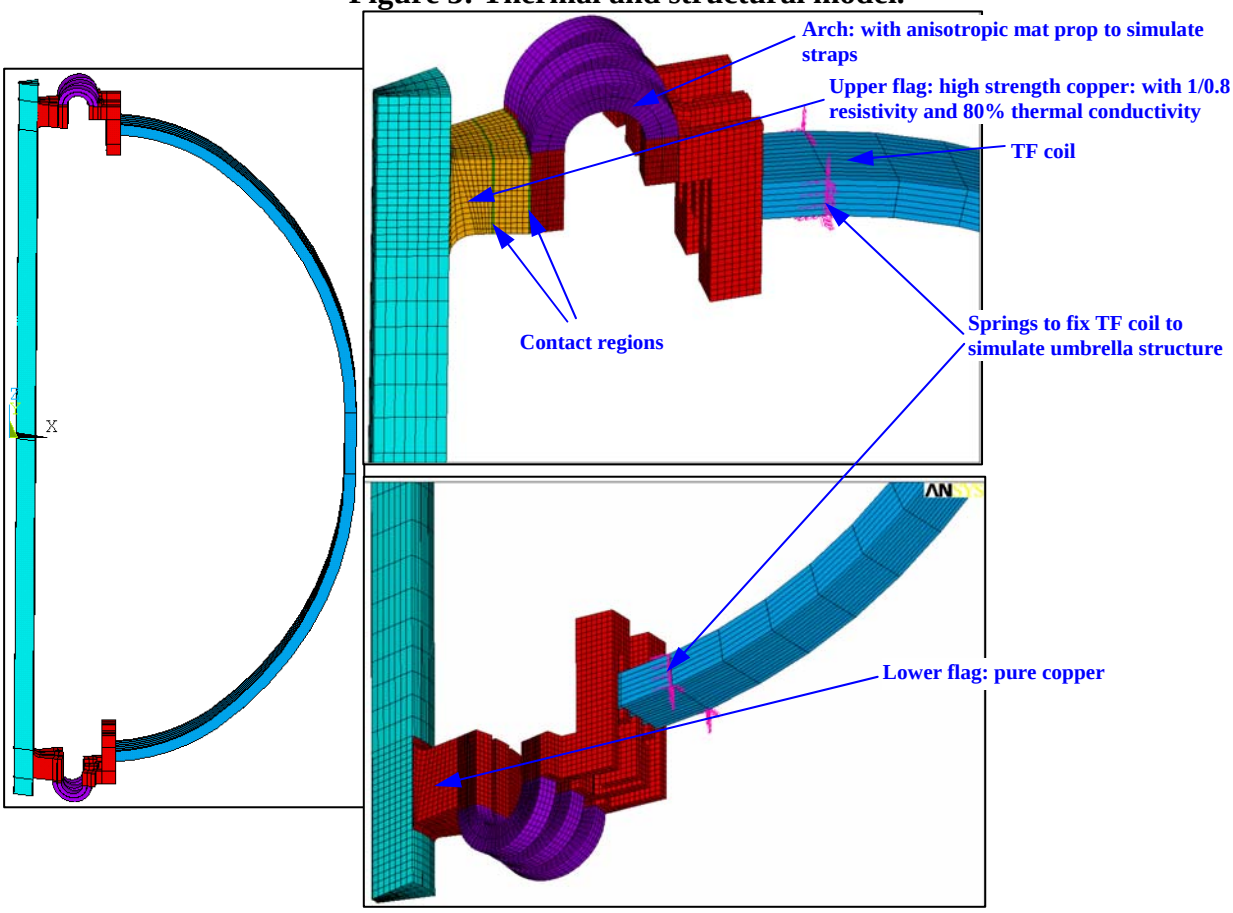

Table 1: Contact resistance data [5].

CONTACT PRESSURE(Pa)	CONDUCTIVITY (S/m^2)	CONTACT PRESSURE(Pa)	CONDUCTIVITY (S/m^2)
1.00000E+00	1.00000E+00	3.16044E+07	1.89971E+10
1.37359E+06	5.35411E+08	3.38778E+07	2.30742E+10
1.47681E+06	5.38476E+08	3.61694E+07	2.74988E+10
1.83862E+06	5.53310E+08	3.84064E+07	3.19775E+10
2.36282E+06	5.78873E+08	4.06156E+07	3.62419E+10
3.07523E+06	6.15297E+08	4.28283E+07	4.10335E+10
3.95984E+06	6.66688E+08	4.49190E+07	4.57280E+10
4.99175E+06	7.53410E+08	4.69450E+07	4.97211E+10
6.18883E+06	8.75474E+08	4.88533E+07	5.30157E+10
7.52698E+06	1.15148E+09	5.06903E+07	5.58498E+10
9.01059E+06	1.79136E+09	5.23996E+07	5.86168E+10
1.06360E+07	2.83763E+09	5.40124E+07	6.09994E+10
1.24087E+07	3.85840E+09	5.54407E+07	6.28324E+10
1.42633E+07	4.79779E+09	5.67574E+07	6.43307E+10
1.62207E+07	5.97101E+09	5.79004E+07	6.54035E+10
1.82582E+07	7.14651E+09	5.89026E+07	6.62942E+10
2.03965E+07	8.29712E+09	5.97272E+07	6.69859E+10
2.26062E+07	9.47304E+09	6.04046E+07	6.74716E+10
2.48285E+07	1.09843E+10	6.08813E+07	6.77217E+10
2.71058E+07	1.29688E+10	6.11718E+07	6.80843E+10
2.93977E+07	1.58780E+10		

Comparison of using high strength copper and pure copper

Because the upper flag has two contact regions, using high strength copper as the flag material can help to maintain high and uniform contact pressure and also lower contact resistance. But high strength copper has higher resistance and lower thermal conductivity. The result shows that using high strength copper (1/0.8 resistivity and 80% thermal conductivity) causes temperature rise of less than 1ºC. So there is some margin to change to high strength copper.

Figure 4: Comparison of using pure copper and high strength copper as flag material. A. Temperature (K).

Pure copper **High strength copper**

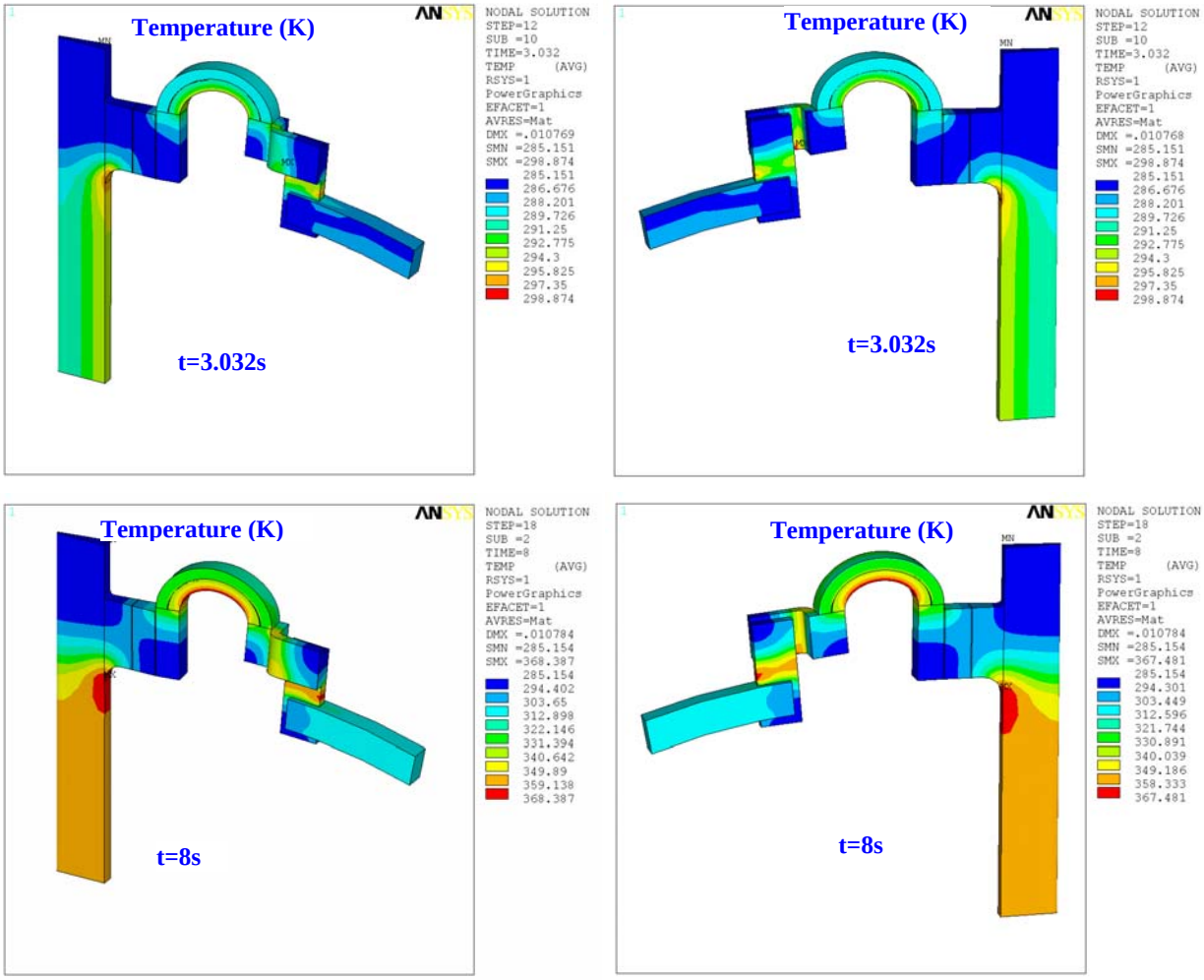

Pure

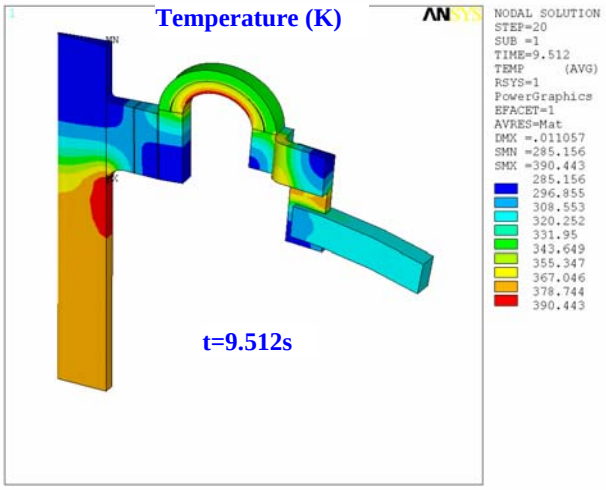

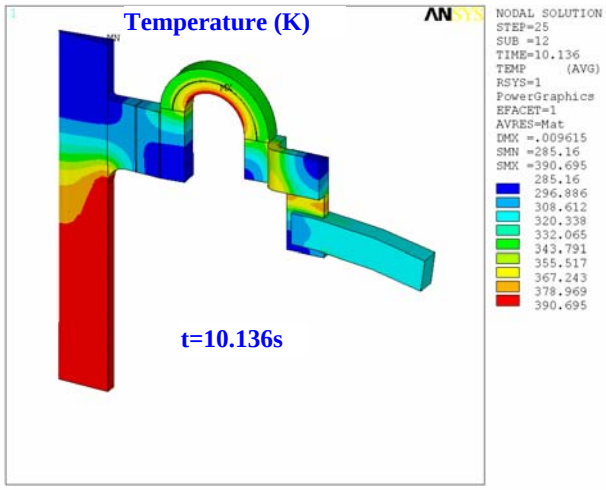

High strength

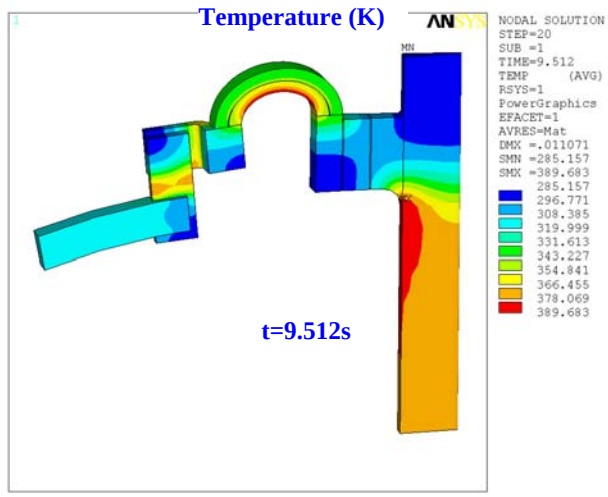

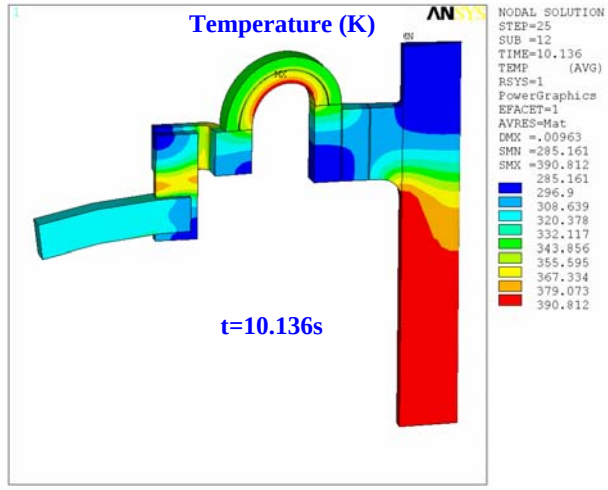

B. Current density (A/m^2).

Pure copper | **High strength copper**

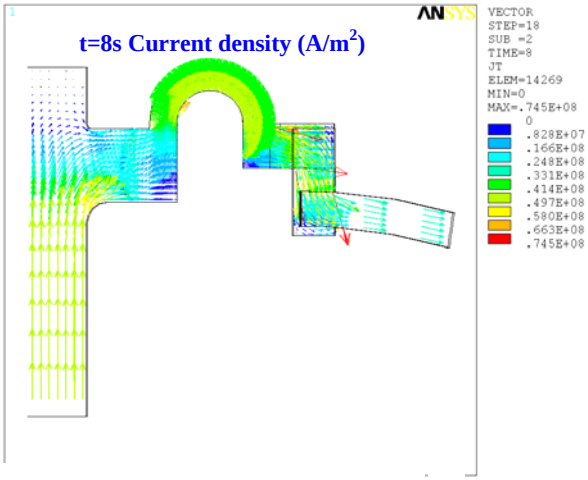

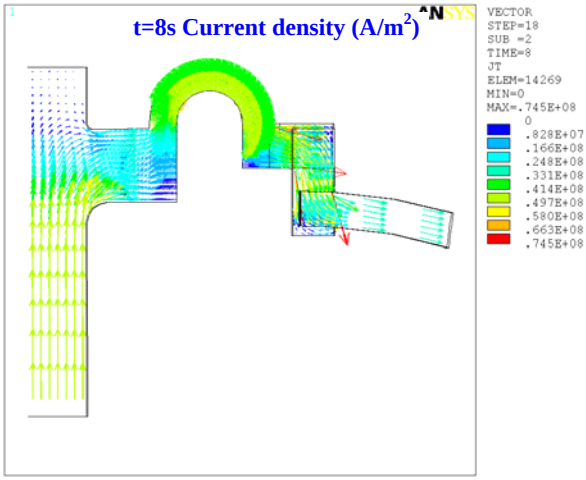

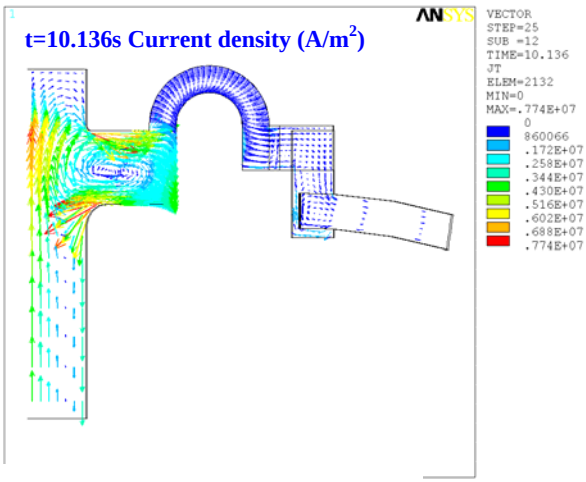

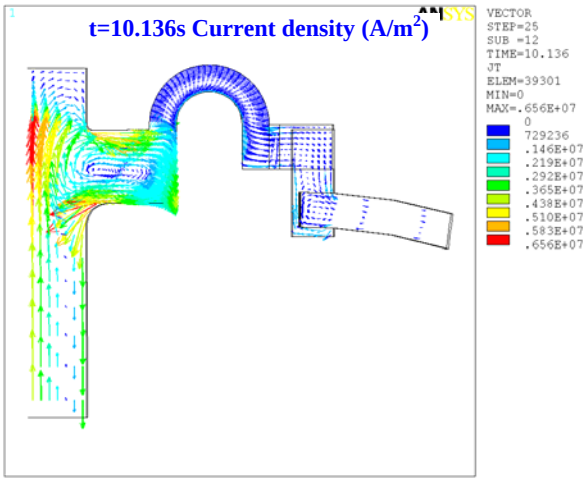

Temperature rise

Fig. 5 shows temperature rise. The maximal temperature is 117ºC at the inside of arch.

Fig. 6 is the time history plot of joint temperature. At the connection plane between central beam and flag, the max temperature difference can reach 103 ºC. Max Von Mises stress is also here (see next sections).

Fig. 7 is the time history plot of coil temperature. Coil temperature reaches highest of 47 ºC at the end of pulse. But the ends can reach 65 ºC and max temperature difference there is 47 ºC because they connected to the joints which have higher temperature and larger temperature difference.

Figure 5: Temperature (K) in the coil.

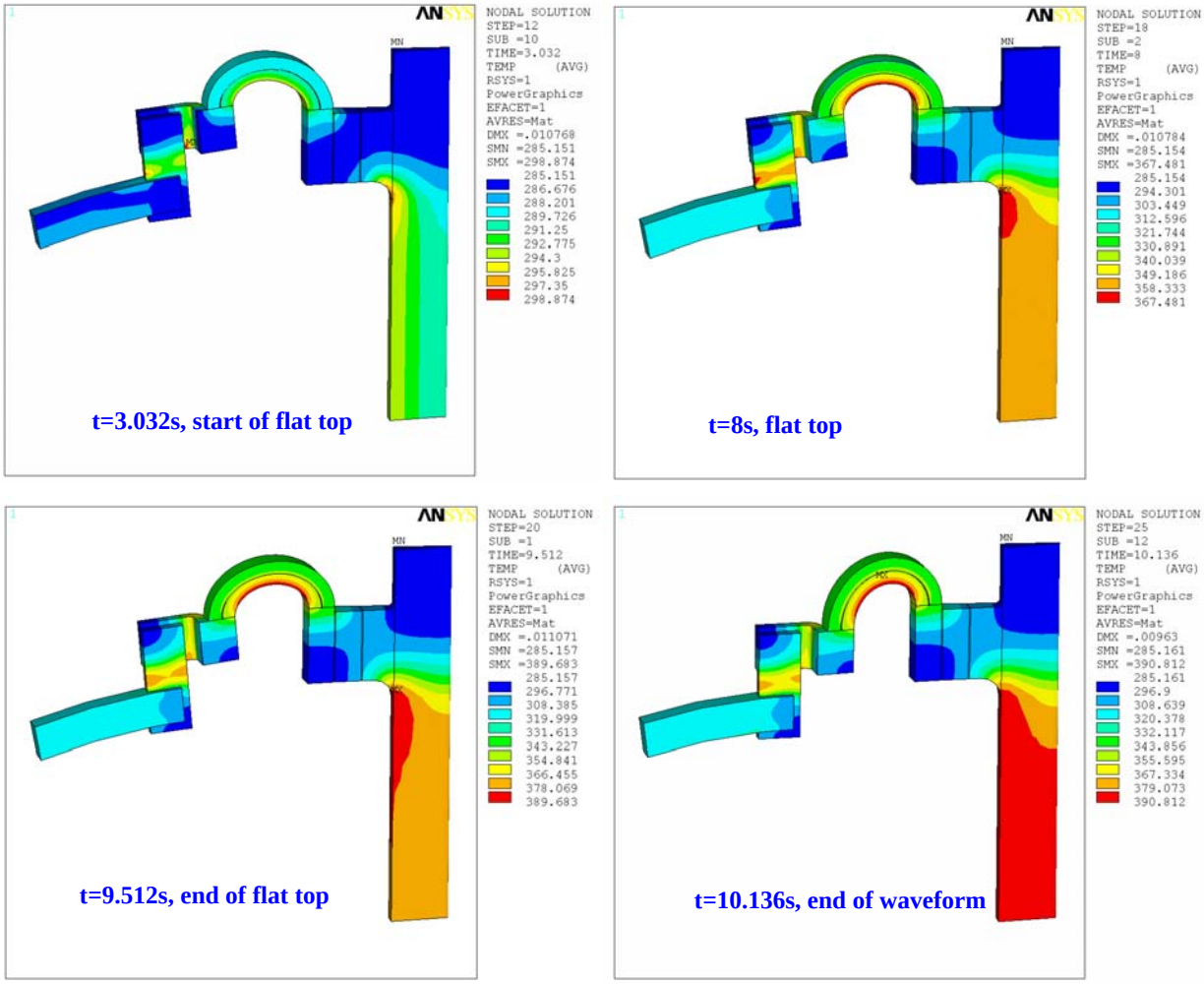

Figure 6: Time history plot of temperature (K).

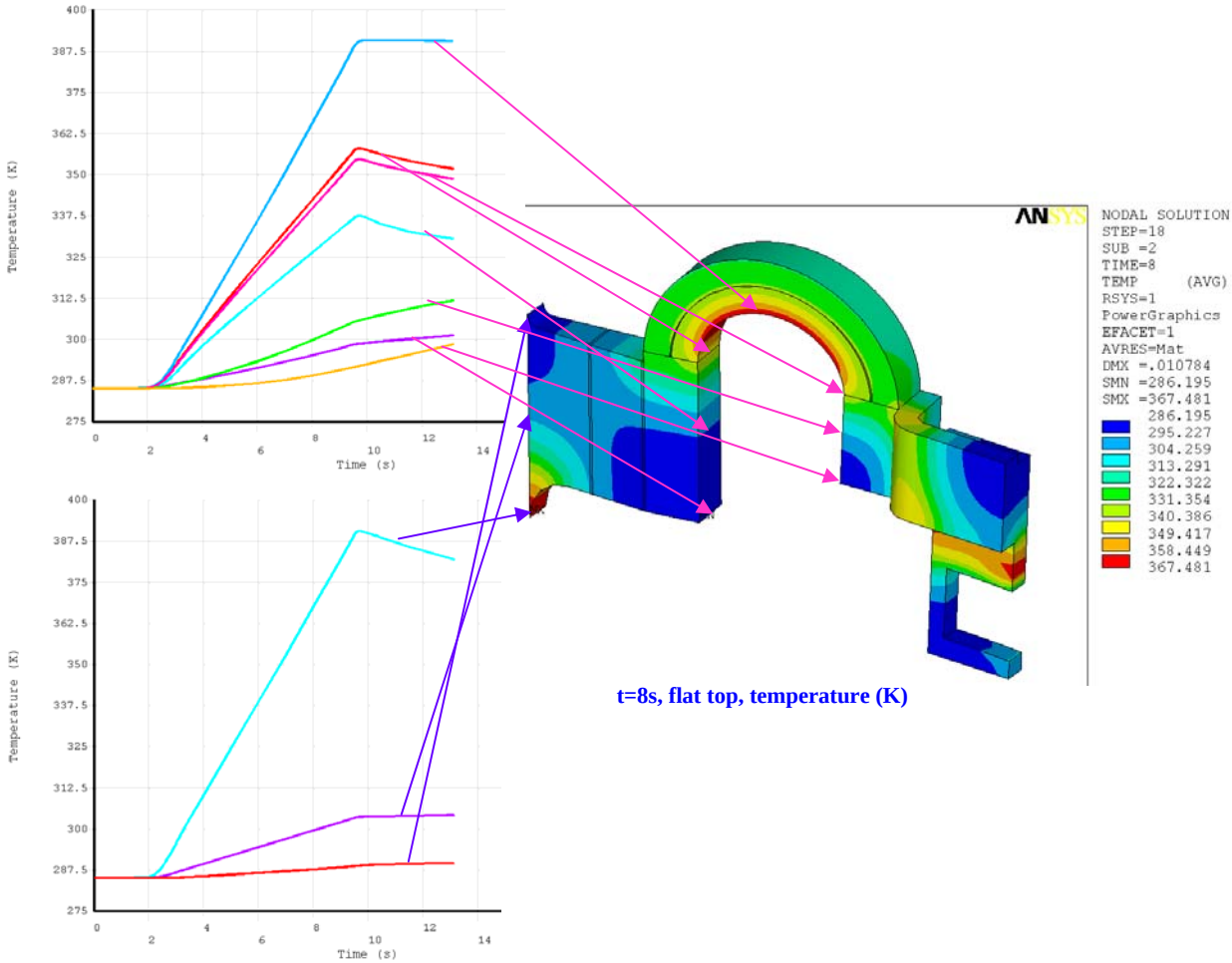

Figure 7: Time history plot of temperature (K).

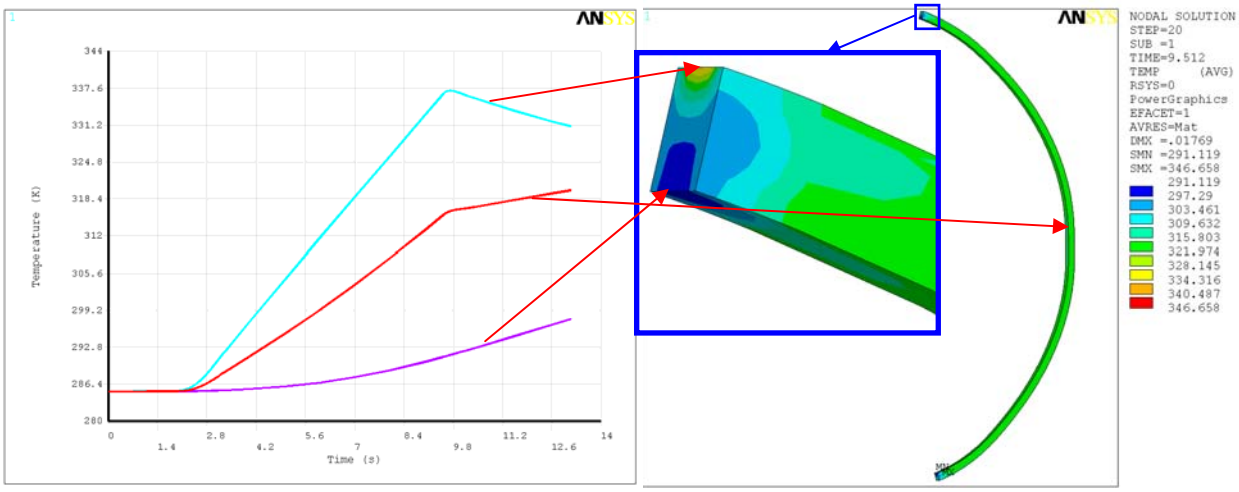

Coil deformation

Fig. 8 shows the deformation of the coil. Maximal radial deformation is 17.4mm (0.685”), theta deformation is <1mm and vertical deformation is 11mm (0.433”). There is no PF coil in this model and thus no out-of-plane force from poroidal field. The connection shape showed in Fig. 9 results in the theta deformation.

Fig. 10 is the time history plot of joint displacement Ux and Uz. The right end of the arch (close to outboard leg) is mainly affected by the magnetic force and thus has a curve shape similar to waveform. The left end and middle point of the arch are mainly affected by the thermal expansion of central beam and thus have a curve shape following temperature rise.

Figure 8: Coil deformation (m).

A. Radial deformation (m).

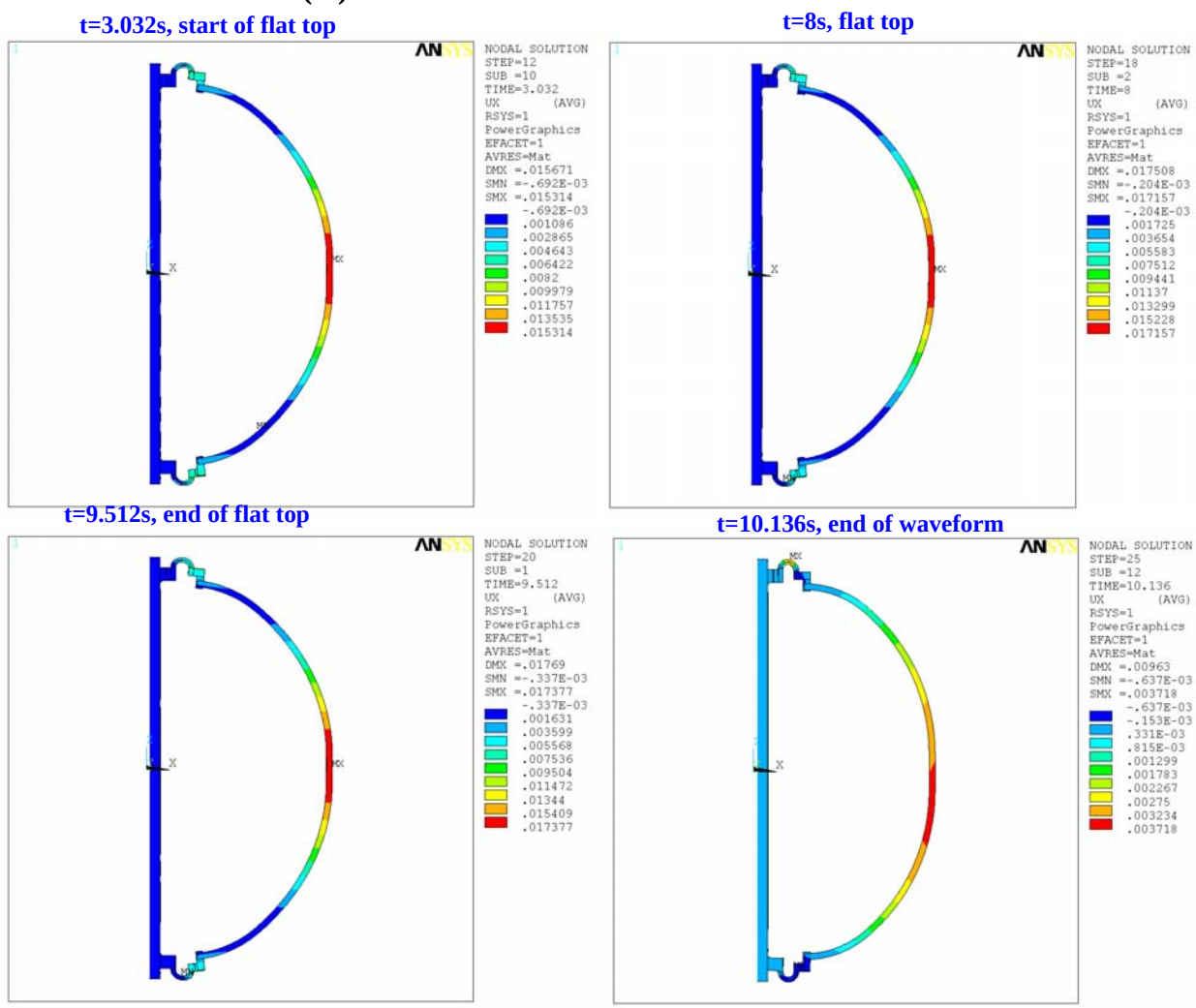

B. Theta deformation (m).

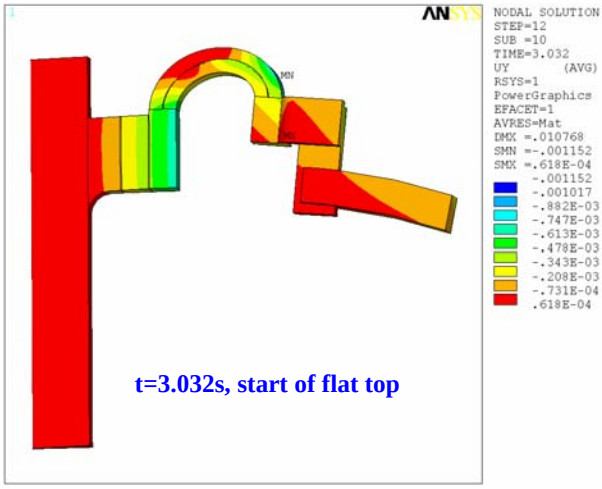

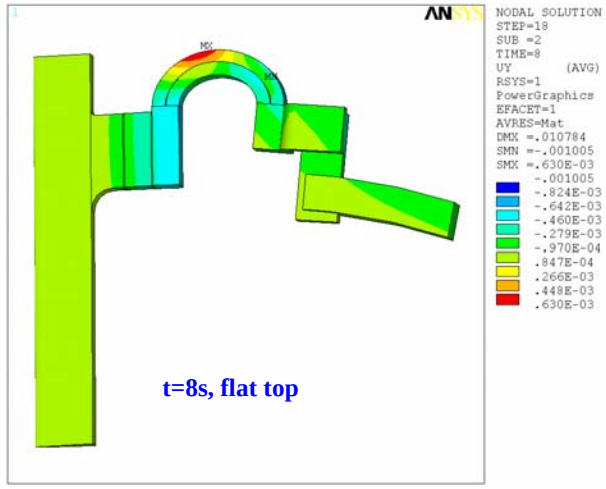

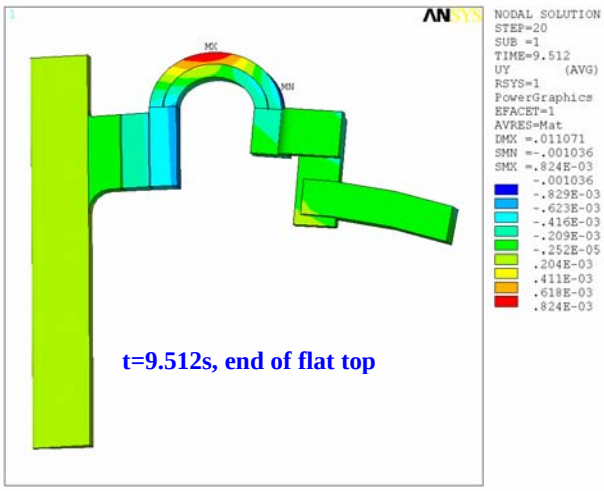

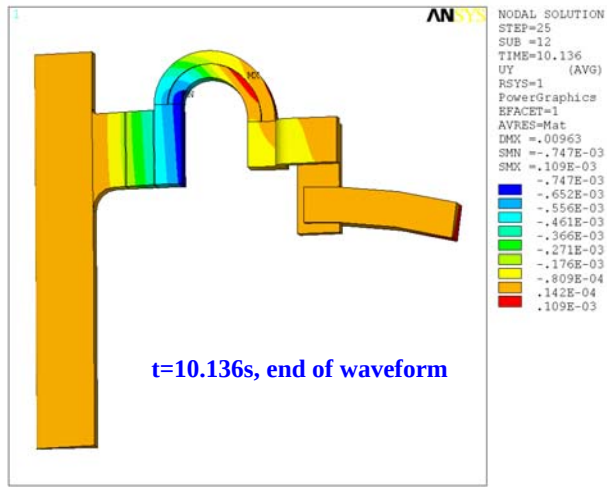

C. Vertical deformation (m).

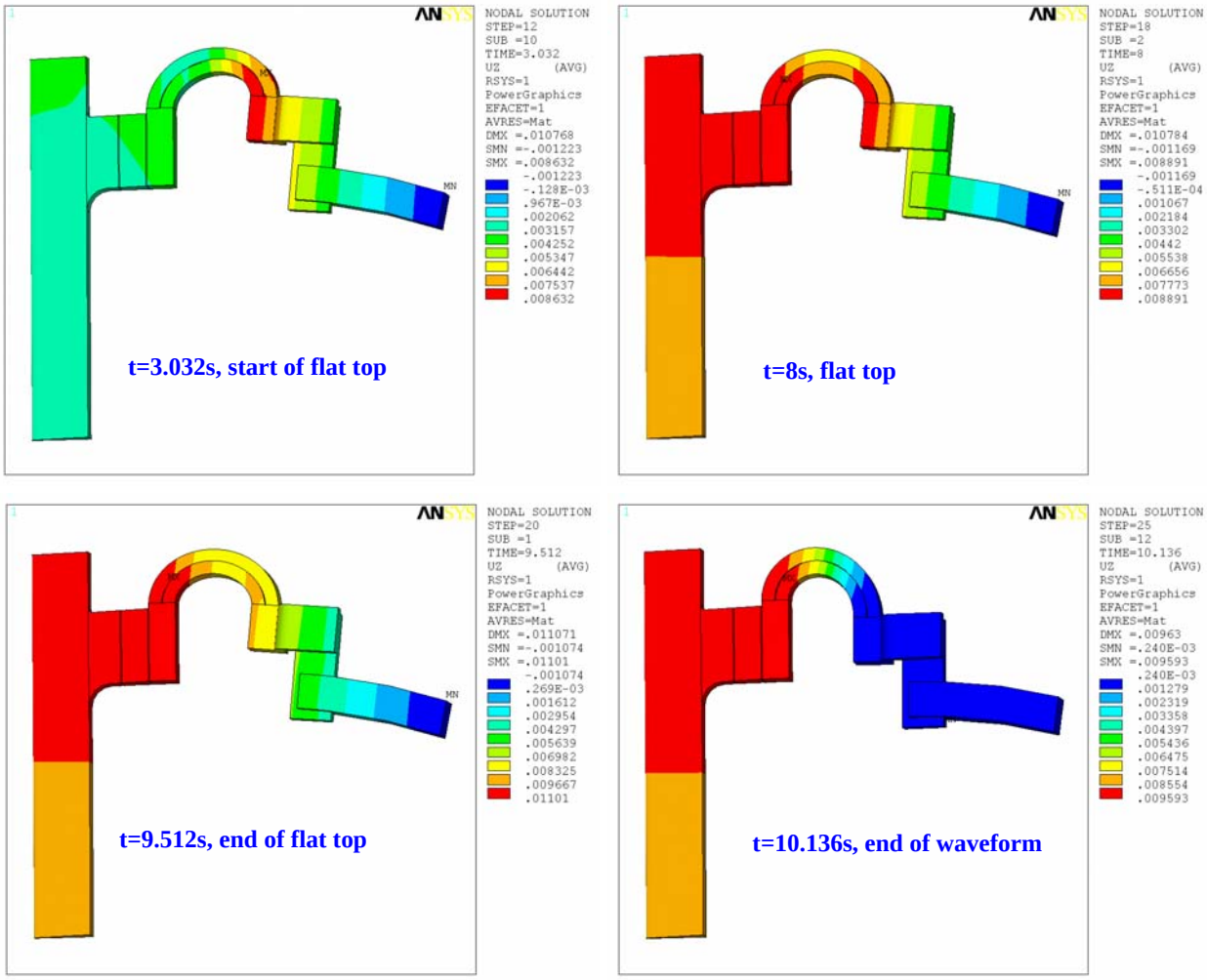

Figure 9: The L-shape connection results in the theta deformation.

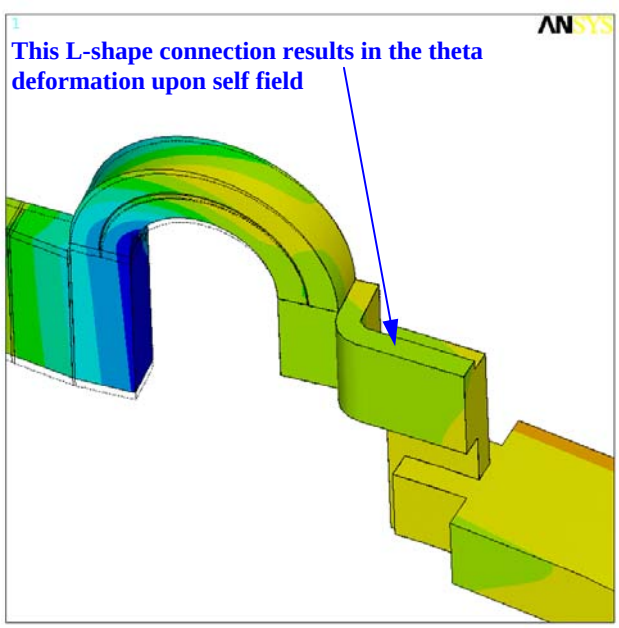

Figure 10**: Time history plot of joint displacement Ux and Uz (m).**

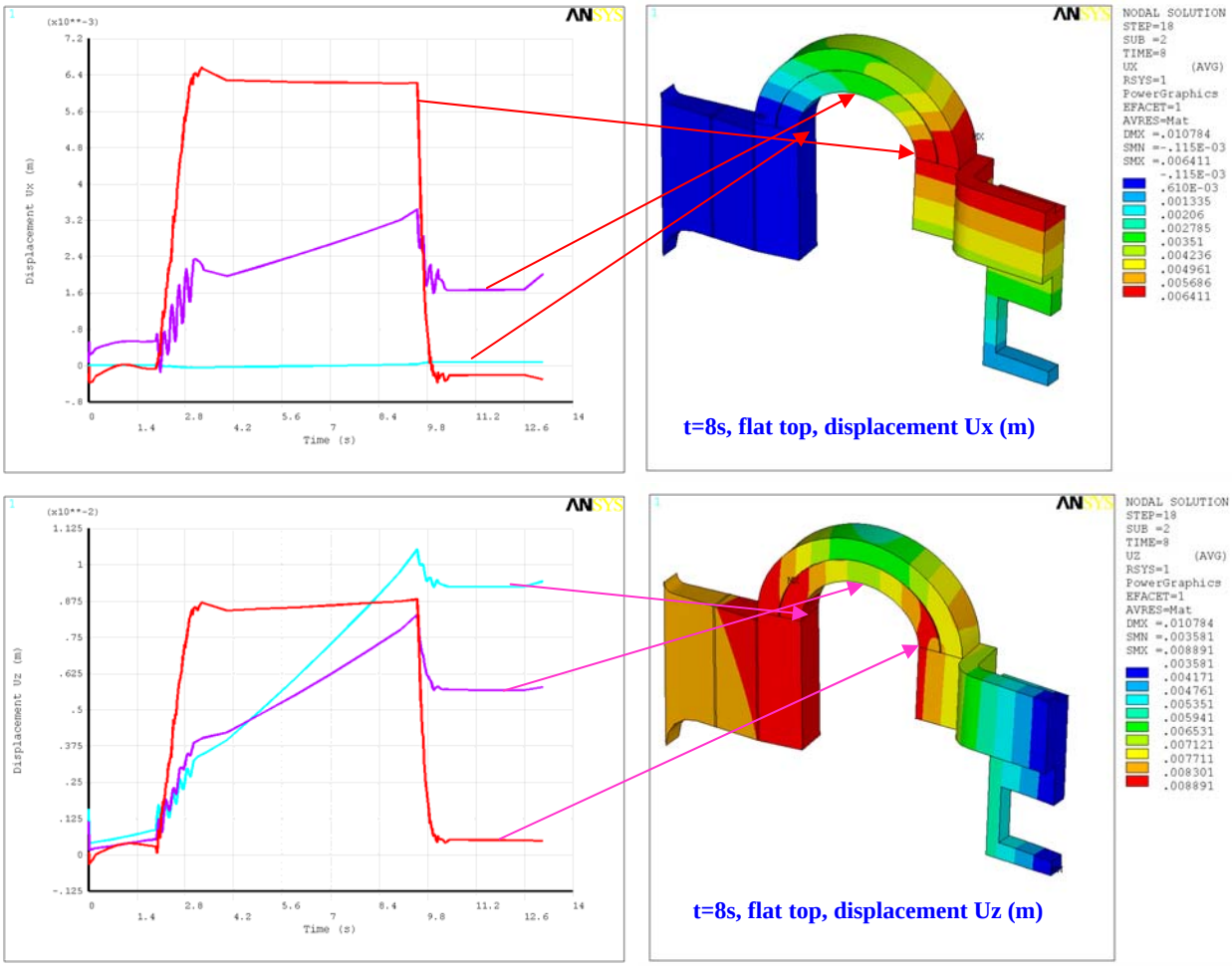

Contact pressure

Fig. 11 shows the stress in the contact regions. 30MPa (4.35ksi) pressure is given as shown in Fig. 11 as bolt pressure. The contact region close to arch can maintain adequate and uniform pressure. But the contact close to central beam has separation and requires more bolts pressure to maintain contact.

Figure 11: Stress in contact regions (Pa).

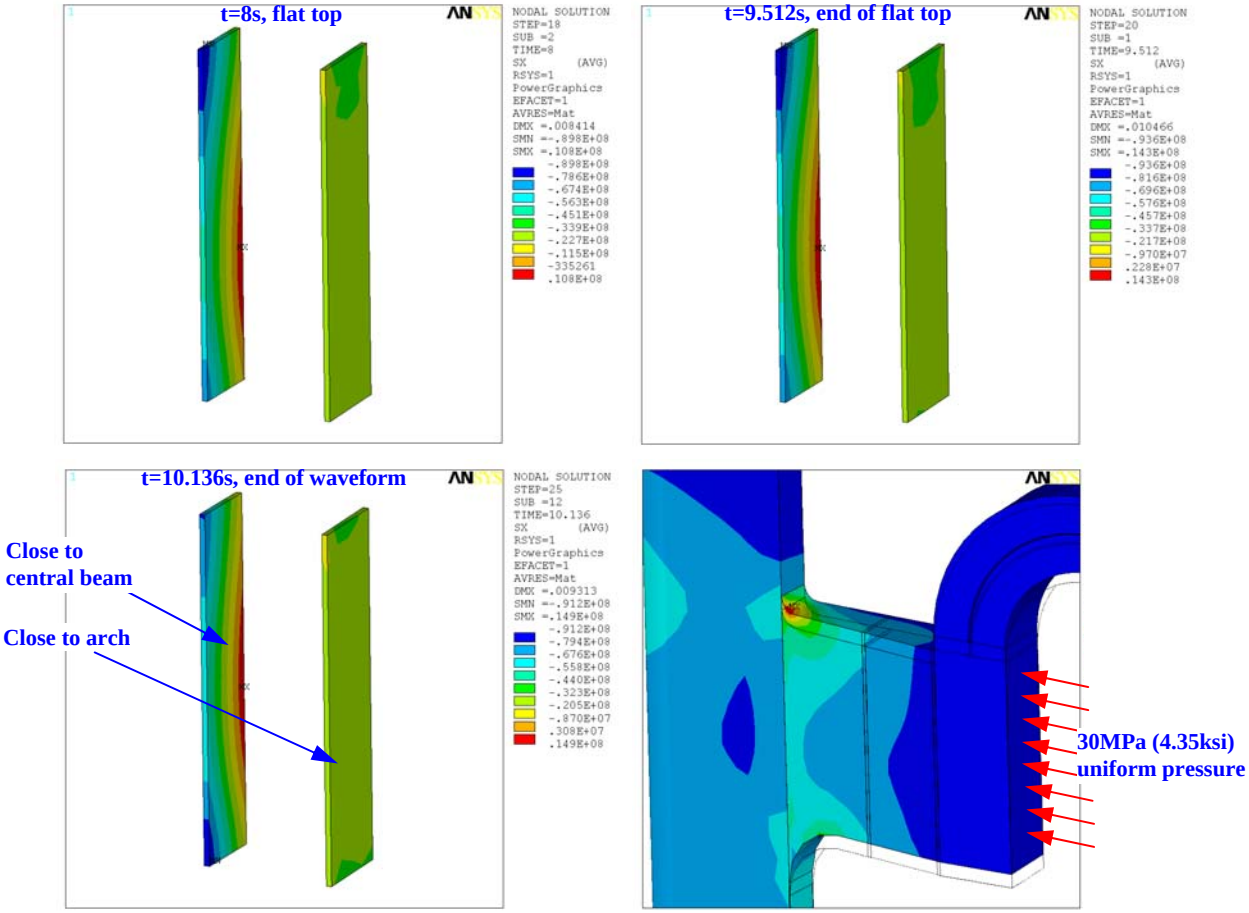

Coil stresses

Fig. 12 shows the Von Mises stress and Fig. 13 is a closer view. Maximal stress is 371 MPa (53.7 ksi). Changing the small fillet into a bigger one or removing the extension of inner leg may help to reduce this stress concentration but this requires further study.

Fig. 14 shows the hoop stress in the upper part.

Figure 12**: Coil Von Mises stress (Pa)**

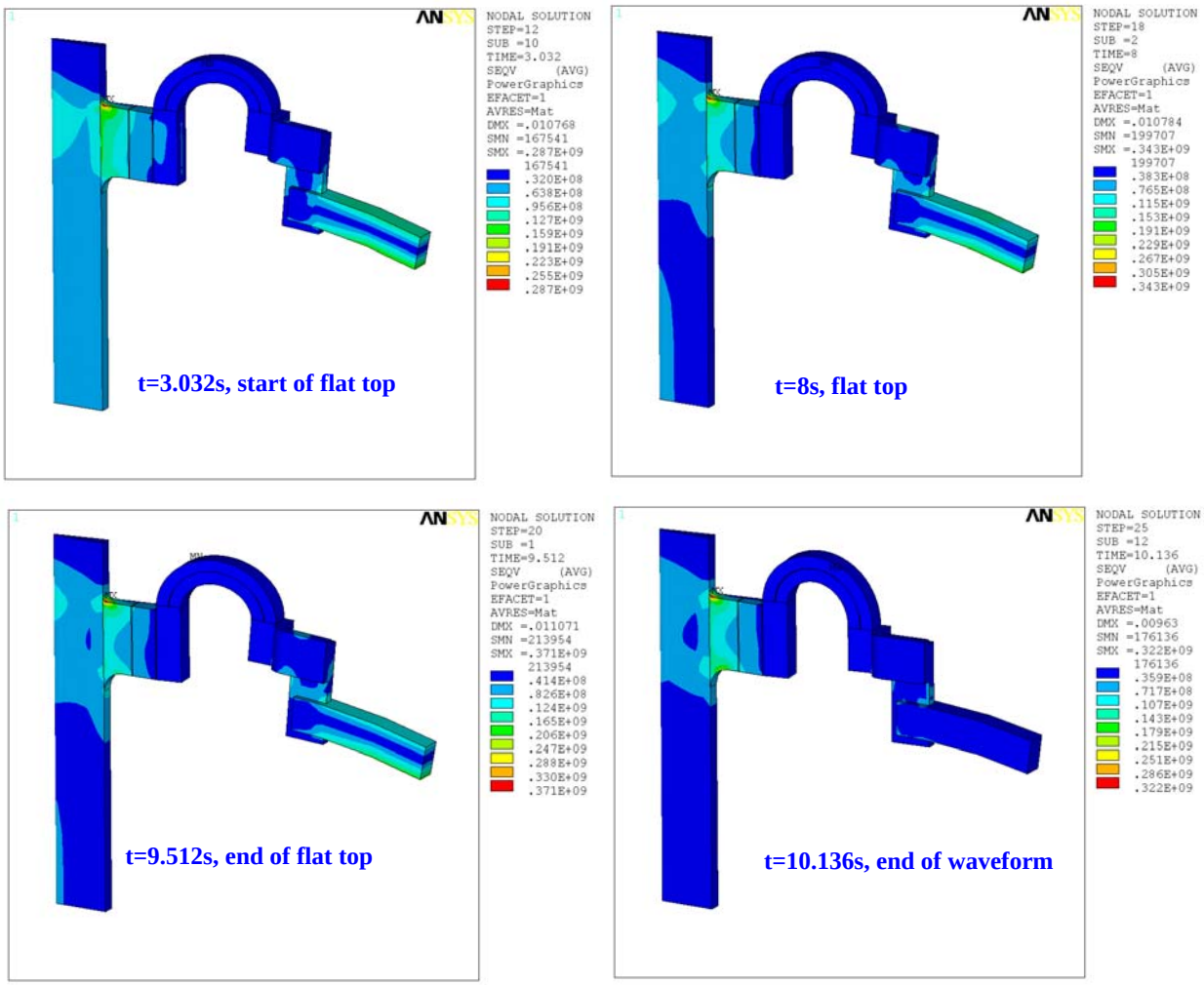

Figure 13: Close view of Von Mises stress (Pa).

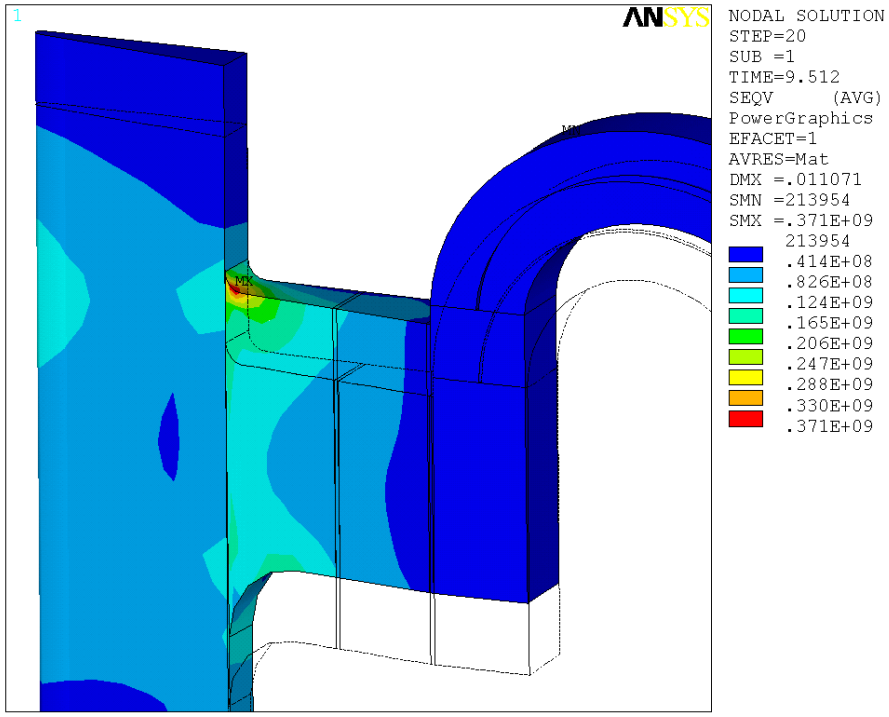
1
ANSYS
MX
NODAL SOLUTION
STEP=20
SUB =1
TIME=9.512
SEQV (AVG)
PowerGraphics
EFACET=1
AVRES=Mat
DMX =.011071
SMN =213954
SMX =.371E+09
213954
.414E+08
.826E+08
.124E+09
.165E+09
.206E+09
.247E+09
.288E+09
.330E+09
.371E+09

Figure 14: Hoop stress (Pa).

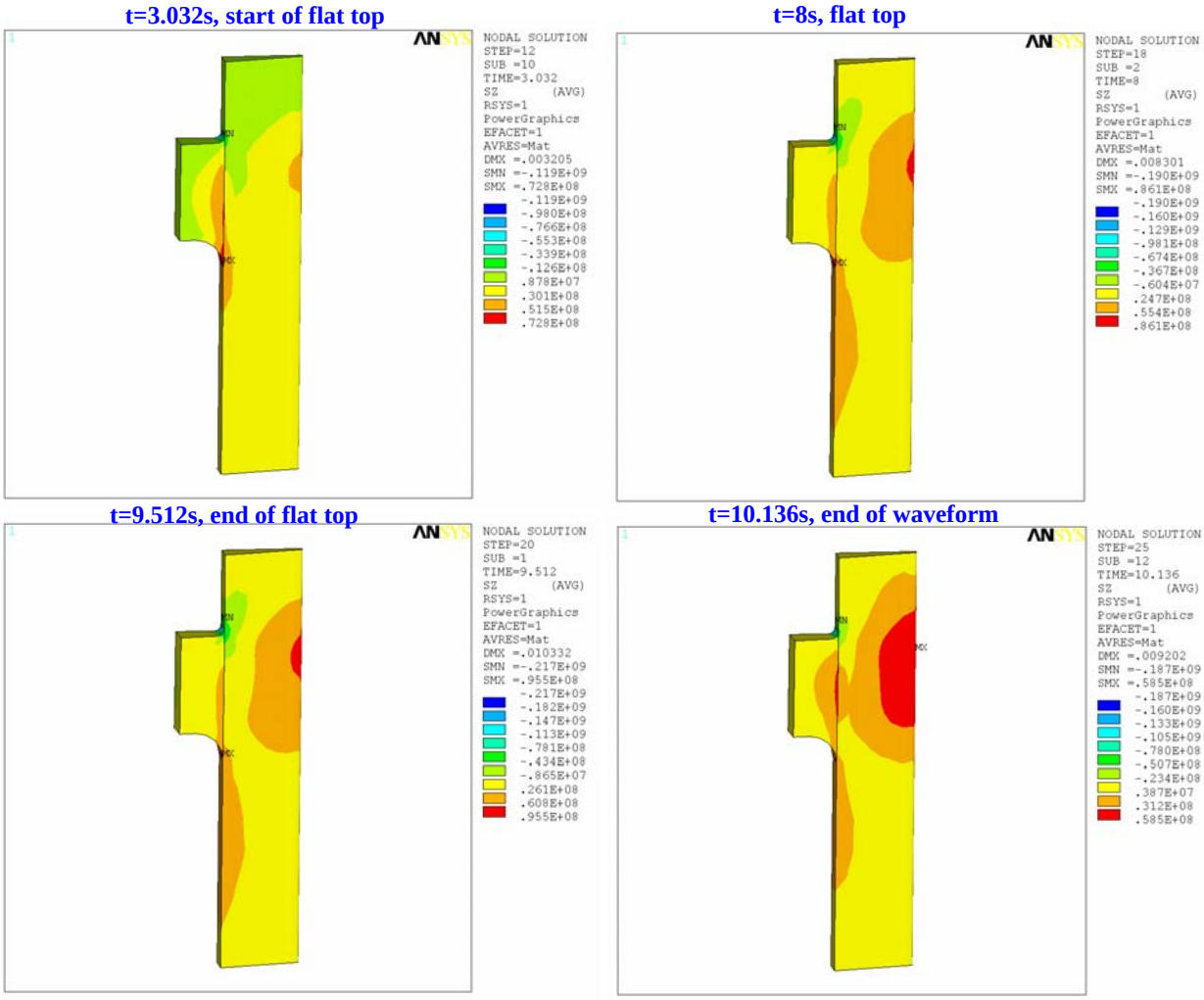

Current density, temperature and toroidal field in the arch area

Each arch is modeled with two solid parts but with anisotropic material properties to simulate the straps. Fig. 15 shows the current density and Fig. 16 shows the temperature in the straps (maximal temperature is 117ºC and maximal temperature difference between inside and outside is 61 ºC).

Fig. 17 shows the estimation of toroidal field in the arch area, which will be useful for the detailed modeling of joint force calculation. Average toroidal field is estimated by reading the radial component of Lorenz force and divided by conductor current and average length. Fig. 17A shows the location for Btheta estimation and B shows the results of radial component of Lorenz force (local coordinate center at the arch center), conductor current, length and the estimated Btheta.
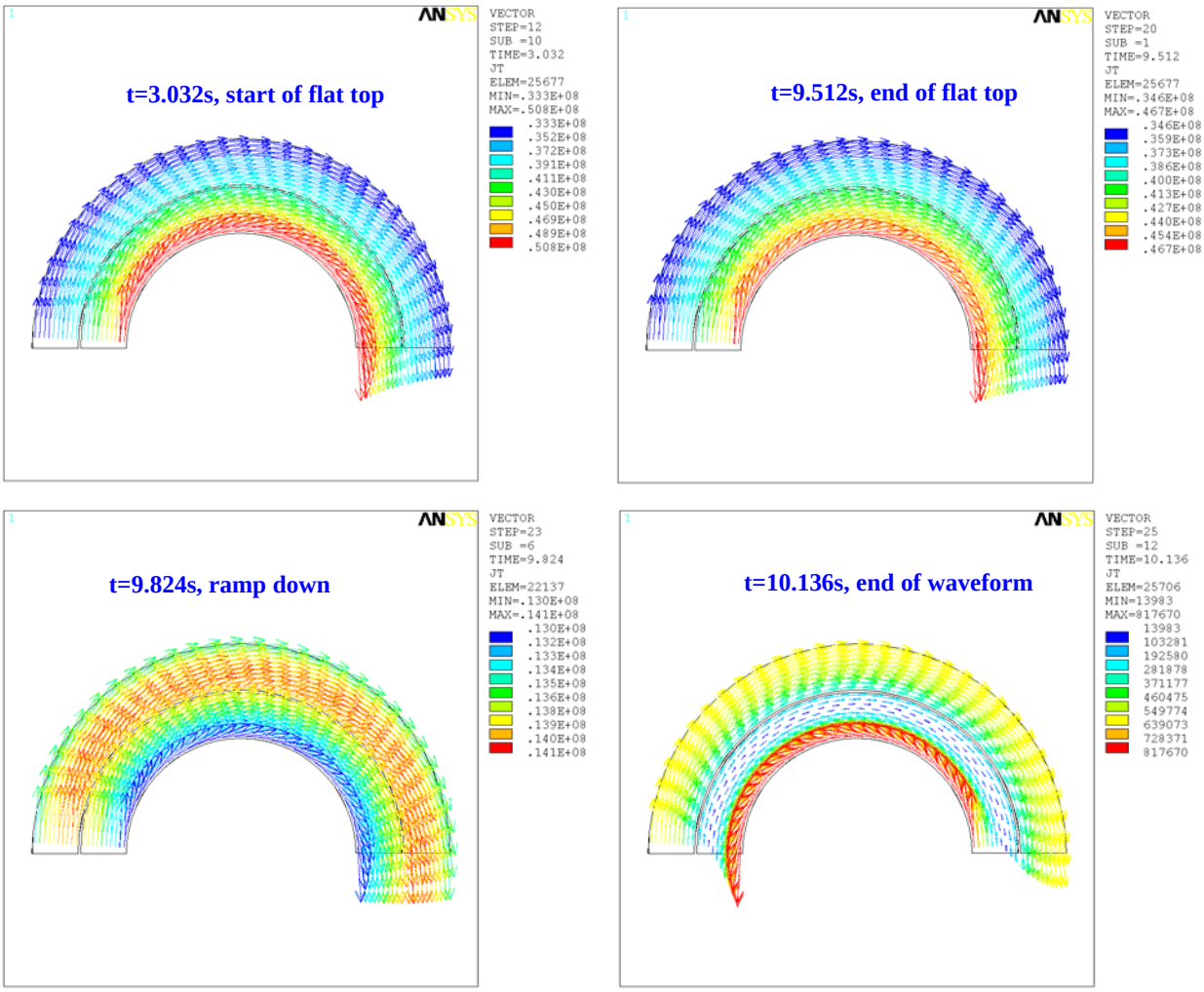
Figure 15: Current density (A/m^2).