NSTX

TF coupled thermal electromagnetic diffusion analysis

NSTX-CALC-132-05-00

Sept 4, 2009

Prepared By:

Han Zhang
2009.10.06 15:30:03 -04'00'

Han Zhang, PPPL Mechanical Engineering

Reviewed By:

Peter Titus

Digitally signed by Peter Titus
DN: cn=Peter Titus, o, ou, email=ptitus@pppl.gov, c=US
Date: 2009.10.06 15:08:34 -04'00'

Peter Titus, Branch Head, Engineering Analysis Division

Approved By:

Phil Heitzenroeder, Head, Mechanical Engineering

Executive Summary

The objective of this analysis is to calculate the temperature and stresses during TF coil ramp up, flat top and ramp down (Fig. 1). PF field is not considered.

The distribution of current in TF coil depends on the resistance, inductance and contact pressure in the contact area. Current distribution results in the non-uniformly distributed temperature and thus may cause deformation and local high thermal stresses in the coil. This analysis is to calculate the current density, Joule heating, temperature distribution and thermal stresses. Currently the arch straps are subject to passive cooling. If its temperature is too high, active cooling may be required. Also it is to know the possibility of using a high strength copper in the flags where bolts must be used to maintain adequate contact pressure.

Figure 1: NSTX normal operation waveform with Ansys input.

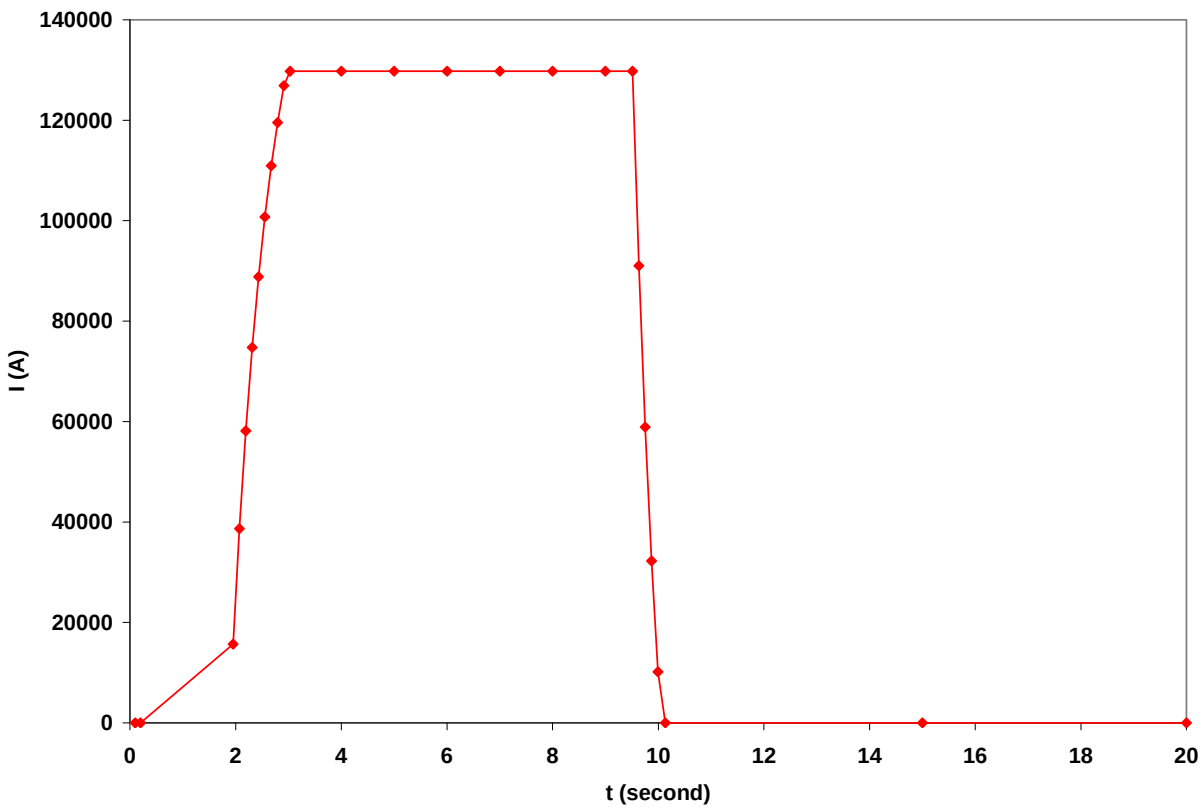


```
!     NSTX Normal Pulse
NumSteps=29
tfbscale=1.0
t1= .1   $ i1= 0
t2= .2  $ i2= 0
t3= 1.952   $ i3= 15690.906*tfbscale
t4= 2.072   $ i4= 38658.746*tfbscale
t5= 2.192   $ i5= 58169.054*tfbscale
t6= 2.312   $ i6= 74742.32*tfbscale
t7= 2.432   $ i7= 88820.681*tfbscale
t8= 2.552   $ i8= 100779.71*tfbscale
t9= 2.672   $ i9= 110938.46*tfbscale
```

```
t10= 2.792   $ i10= 119567.93*tfbscale
t11= 2.912   $ i11= 126898.33*tfbscale
t12= 3.032   $ i12= 129777.84*tfbscale
t13= 4.0   $ i13= 129777.84*tfbscale
t14= 5.0     $ i14= 129777.84*tfbscale
t15= 6.0   $ i15= 129777.84*tfbscale
t16= 7.0   $ i16= 129777.84*tfbscale
t17= 8.0   $ i17= 129777.84*tfbscale
t18= 9.0   $ i18= 129777.84*tfbscale
t19= 9.512   $ i19= 129777.84*tfbscale
t20= 9.632   $ i20= 91022.609*tfbscale
t21= 9.752   $ i21= 58895.183*tfbscale
t22= 9.872   $ i22= 32262.092*tfbscale
t23= 9.992   $ i23= 10183.711*tfbscale
t24= 10.136   $ i24= 0
t25= 15.0   $ i25= 0
t26= 20.0   $ i26= 0
t27= 30.0   $ i27= 0
t28= 40.0   $ i28= 0
t29= 1200.0   $ i29= 0
```

Table of Contents

List of Figures 5
List of Tables 5
Modeling 6
Comparison of using high strength copper and pure copper 8
Temperature rise 12
Coil deformation 13
Coil stresses 16
Current density and temperature in the arch 17
Contact pressure 19

List of Figures

Figure 1: NSTX normal operation waveform with Ansys input..... 2
Figure 2: Electromagnetic model..... 6
Figure 3: Thermal model. 7
Figure 4: Comparison of using pure copper and high strength copper as flag material. 9
Figure 5: Temperature (K)..... 12
Figure 6: Coil deformation (m)..... 13
Figure 7: The connection shape results in the theta deformation. 15
Figure 8: Von Mises stress (Pa)..... 16
Figure 9: Close view of Von Mises stress (Pa)..... 16
Figure 10: Hoop stress (Pa)..... 17
Figure 11: Current density (A/m^2)..... 18
Figure 12: Temperature (K)..... 19
Figure 13: Stress in contact regions (Pa). 20

List of Tables

Table 1: Contact resistance data (from R. Woolley)..... 8

Modeling

This is a transient and coupled field analysis. An electromagnetic model (Fig. 2) is used to calculated current diffusion effect and transfer the generated heat to thermal model. The thermal model (Fig. 3) is to calculate the temperature, thermal stress and contact pressure at contact areas and transfer these data to electromagnetic model. The materials have temperature dependent material properties, including electrical resistivity, thermal conductivity, specific heat, coefficients of thermal expansion. The arches have anisotropic resistivity and thermal conductivity to simulate the straps. Because the arch is made of many straps and not a solid copper, it becomes much more compliant. The modulus of the arch is modified from the result of T. Willard. The upper flag uses high strength copper which has 1/0.8 resistivity and 80% thermal conductivity of pure copper. In next section, the results show that using high-strength copper or pure copper doesn't have much difference. The lower flag uses pure copper. In the electromagnetic model, the contact regions have pressure dependent resistivity and the data are from R. Woolley (Table 1).

Figure 2: Electromagnetic model.

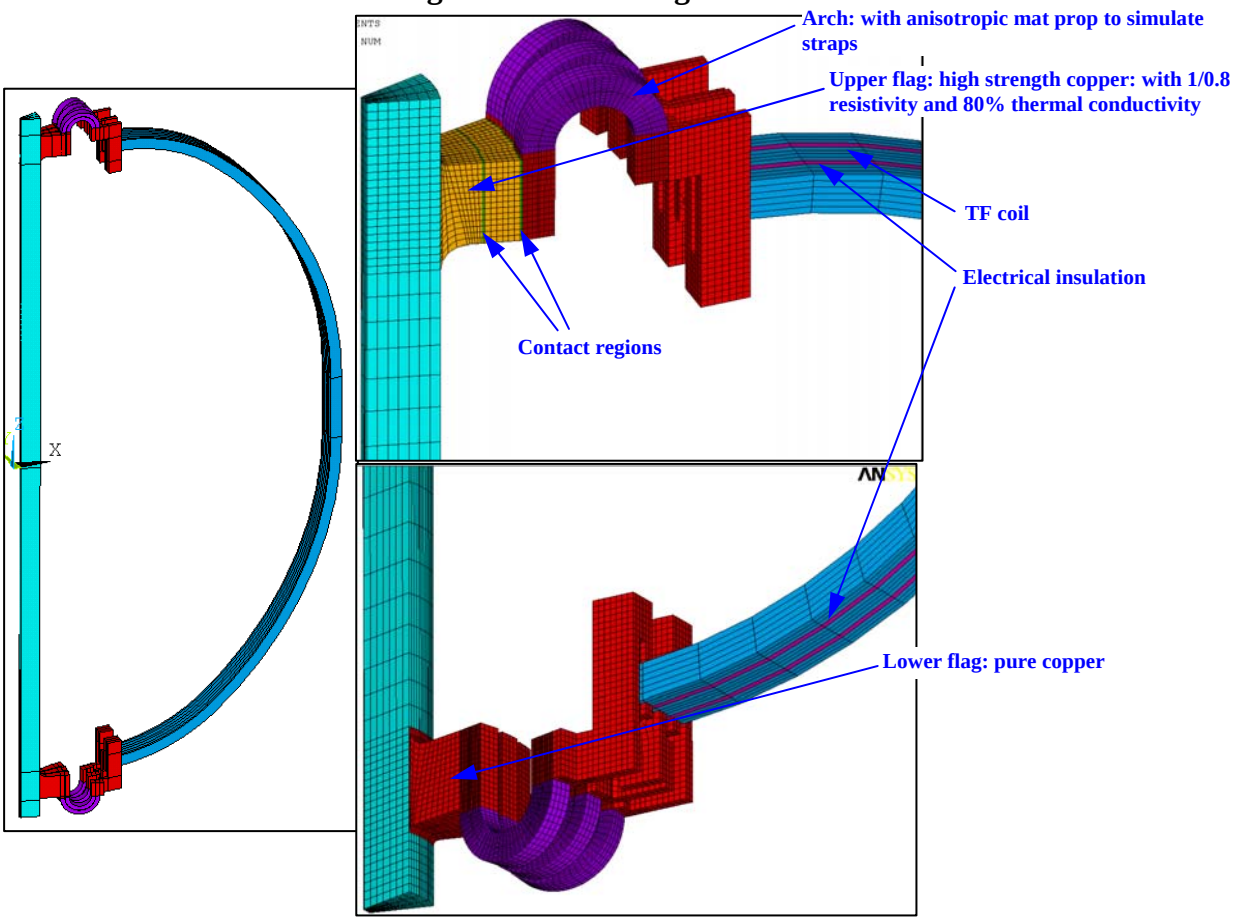

Figure 3: Thermal model.

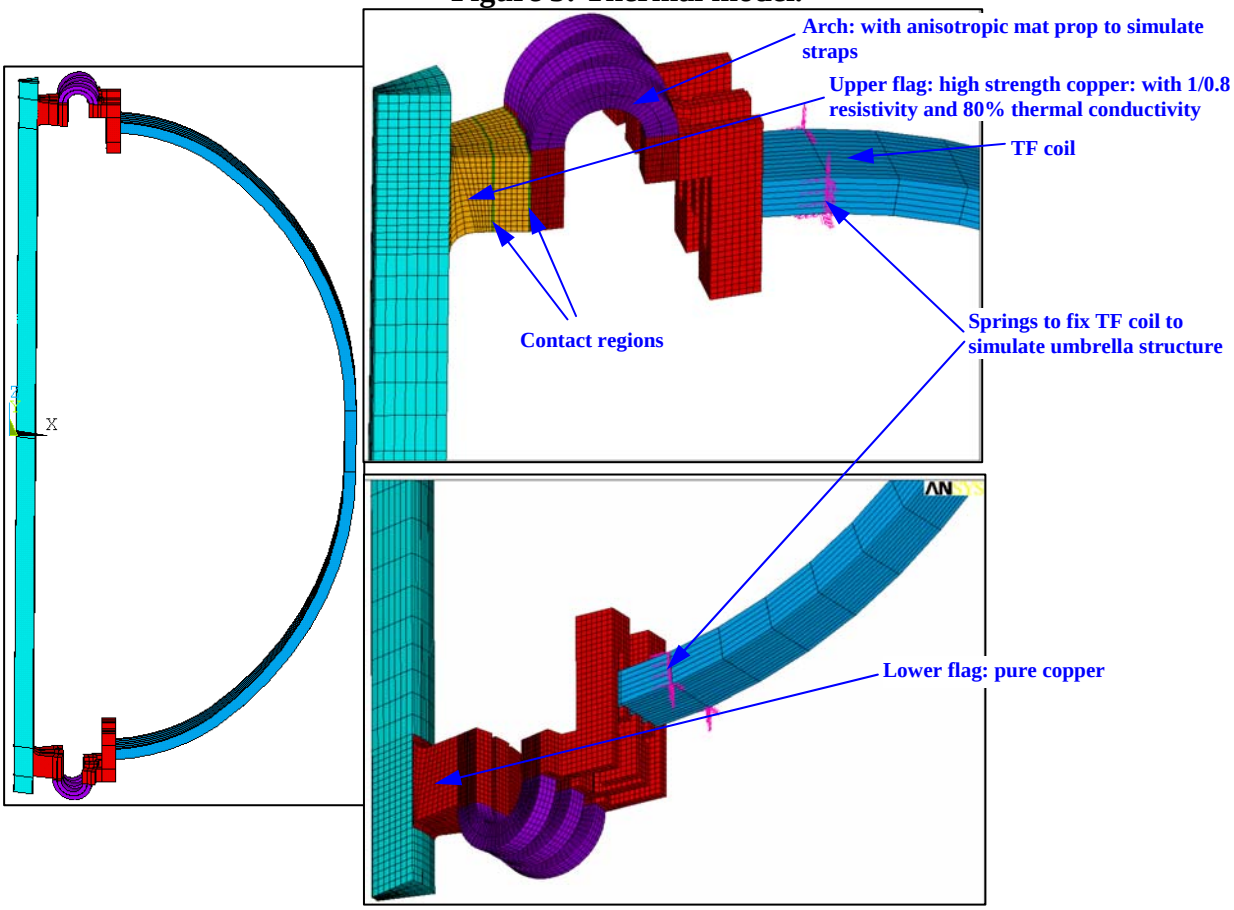

Table 1: Contact resistance data (from R. Woolley).

CONTACT PRESSURE(Pa)	CONDUCTIVITY (S/m^2)	CONTACT PRESSURE(Pa)	CONDUCTIVITY (S/m^2)
1.00000E+00	1.00000E+00	3.16044E+07	1.89971E+10
1.37359E+06	5.35411E+08	3.38778E+07	2.30742E+10
1.47681E+06	5.38476E+08	3.61694E+07	2.74988E+10
1.83862E+06	5.53310E+08	3.84064E+07	3.19775E+10
2.36282E+06	5.78873E+08	4.06156E+07	3.62419E+10
3.07523E+06	6.15297E+08	4.28283E+07	4.10335E+10
3.95984E+06	6.66688E+08	4.49190E+07	4.57280E+10
4.99175E+06	7.53410E+08	4.69450E+07	4.97211E+10
6.18883E+06	8.75474E+08	4.88533E+07	5.30157E+10
7.52698E+06	1.15148E+09	5.06903E+07	5.58498E+10
9.01059E+06	1.79136E+09	5.23996E+07	5.86168E+10
1.06360E+07	2.83763E+09	5.40124E+07	6.09994E+10
1.24087E+07	3.85840E+09	5.54407E+07	6.28324E+10
1.42633E+07	4.79779E+09	5.67574E+07	6.43307E+10
1.62207E+07	5.97101E+09	5.79004E+07	6.54035E+10
1.82582E+07	7.14651E+09	5.89026E+07	6.62942E+10
2.03965E+07	8.29712E+09	5.97272E+07	6.69859E+10
2.26062E+07	9.47304E+09	6.04046E+07	6.74716E+10
2.48285E+07	1.09843E+10	6.08813E+07	6.77217E+10
2.71058E+07	1.29688E+10	6.11718E+07	6.80843E+10
2.93977E+07	1.58780E+10		

Comparison of using high strength copper and pure copper

Because the upper flag has two contact regions, using high strength copper as the flag material can help to maintain high and uniform contact pressure and also lower contact resistance. But high strength copper has higher resistance and lower thermal conductivity. The result shows that using high strength copper (1/0.8 resistivity and 80% thermal conductivity) causes temperature rise of less than 1ºC. So that we have room to change to high strength copper.

Figure 4: Comparison of using pure copper and high strength copper as flag material.

A. Temperature (K).

Pure copper | **High strength copper**

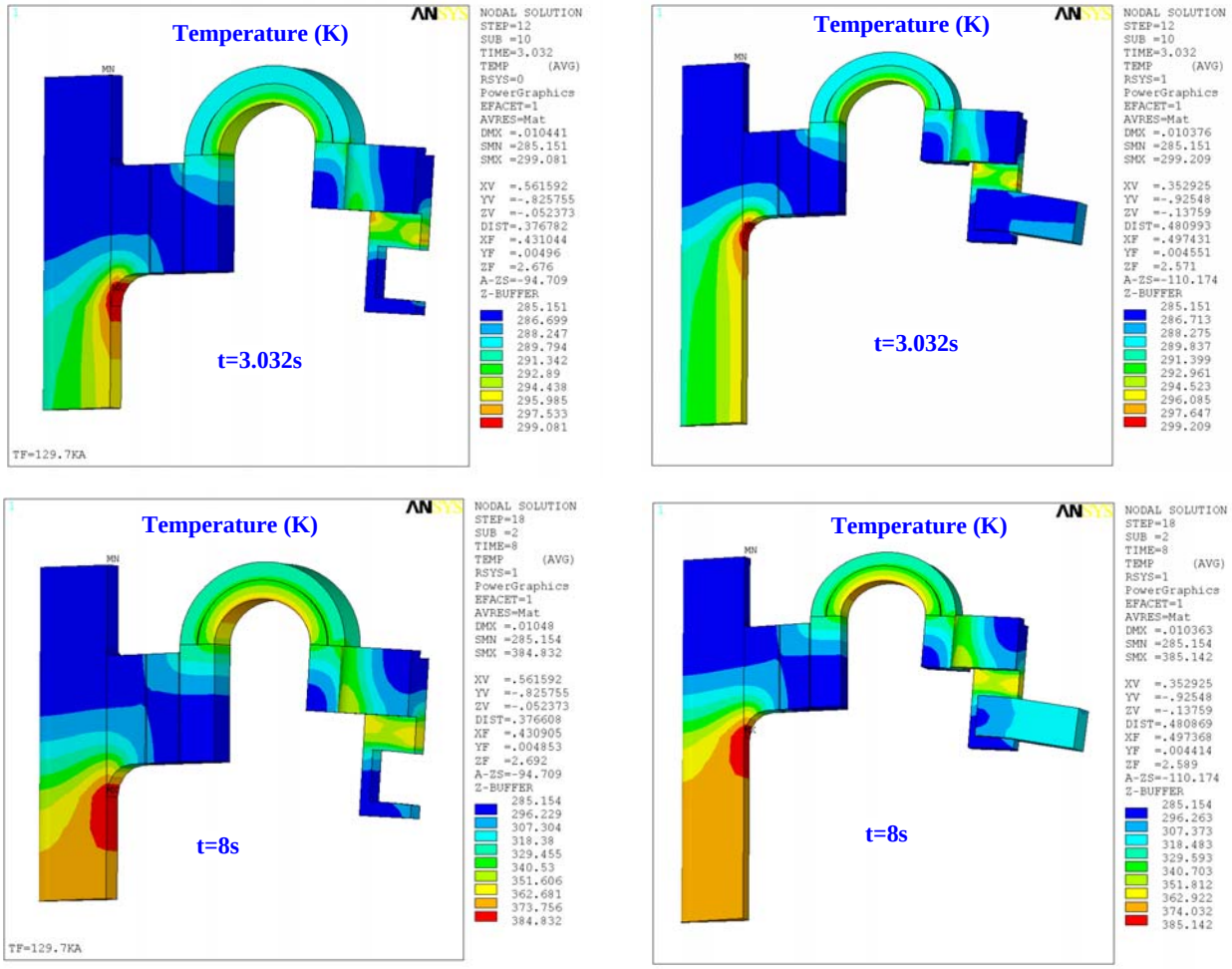

Pure copper

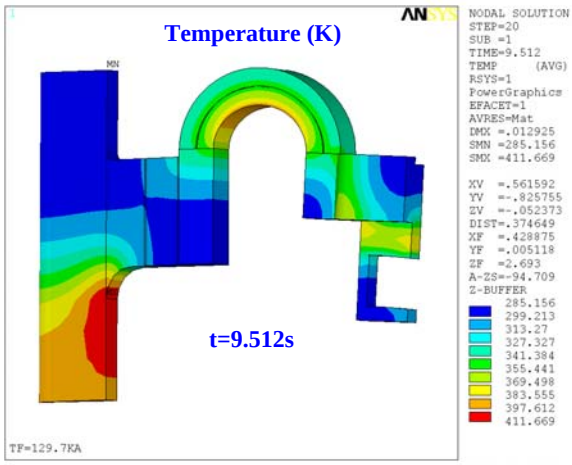

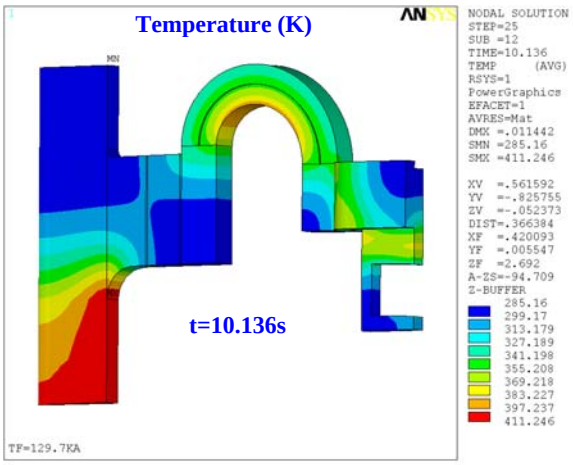

High strength copper

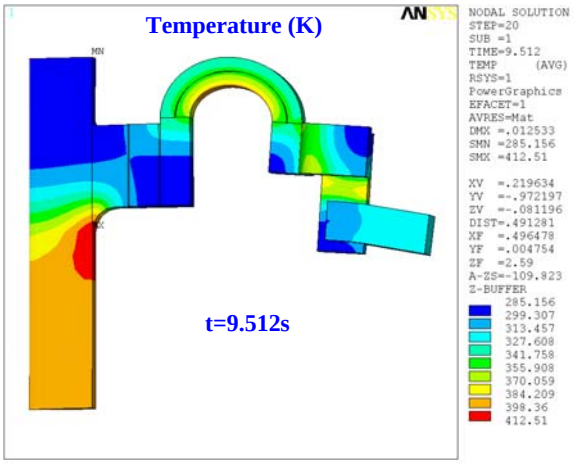

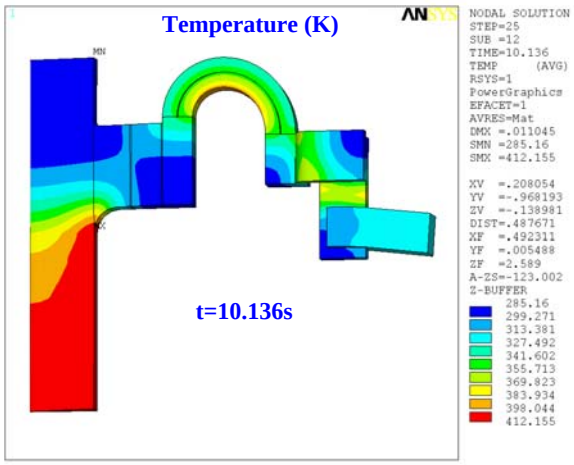

B. Current density (A/m^2).

Pure copper | **High strength copper**

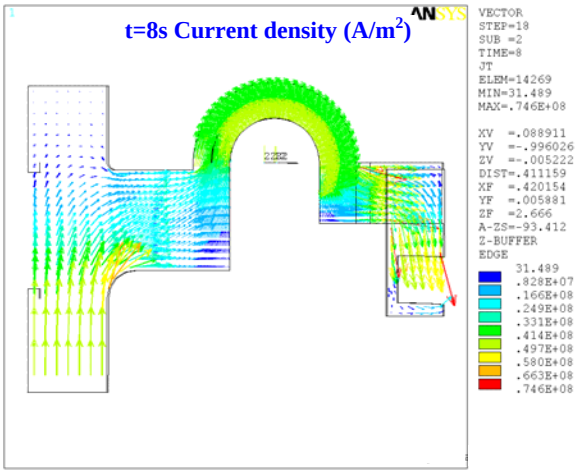

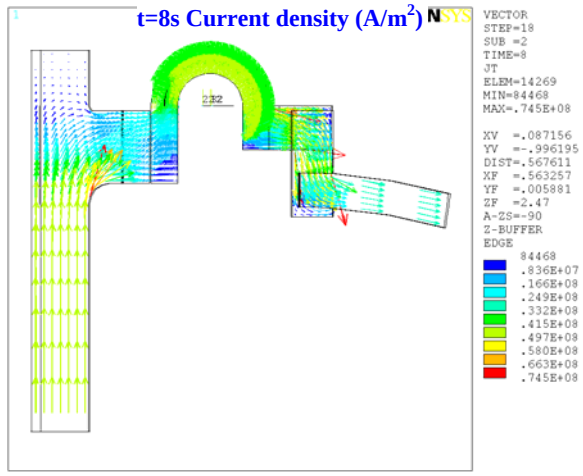

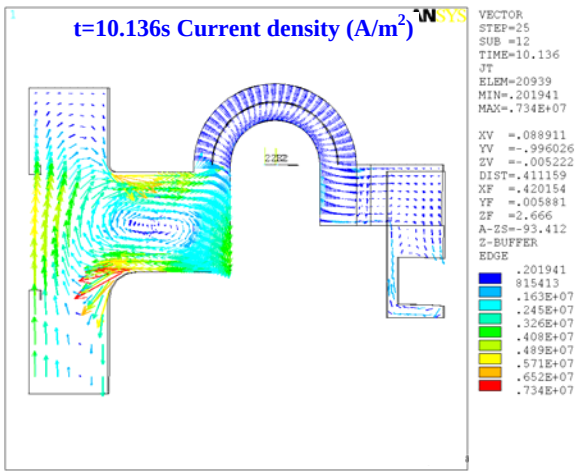

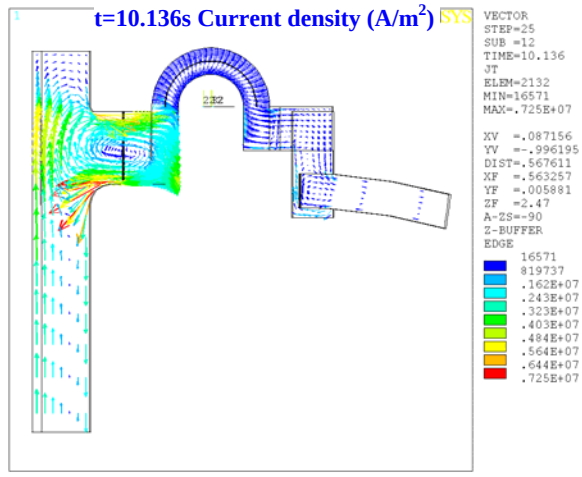

Temperature rise

Fig. 5 shows temperature rise. The maximal temperature is 140ºC (inner coil).

Figure 5: Temperature (K).

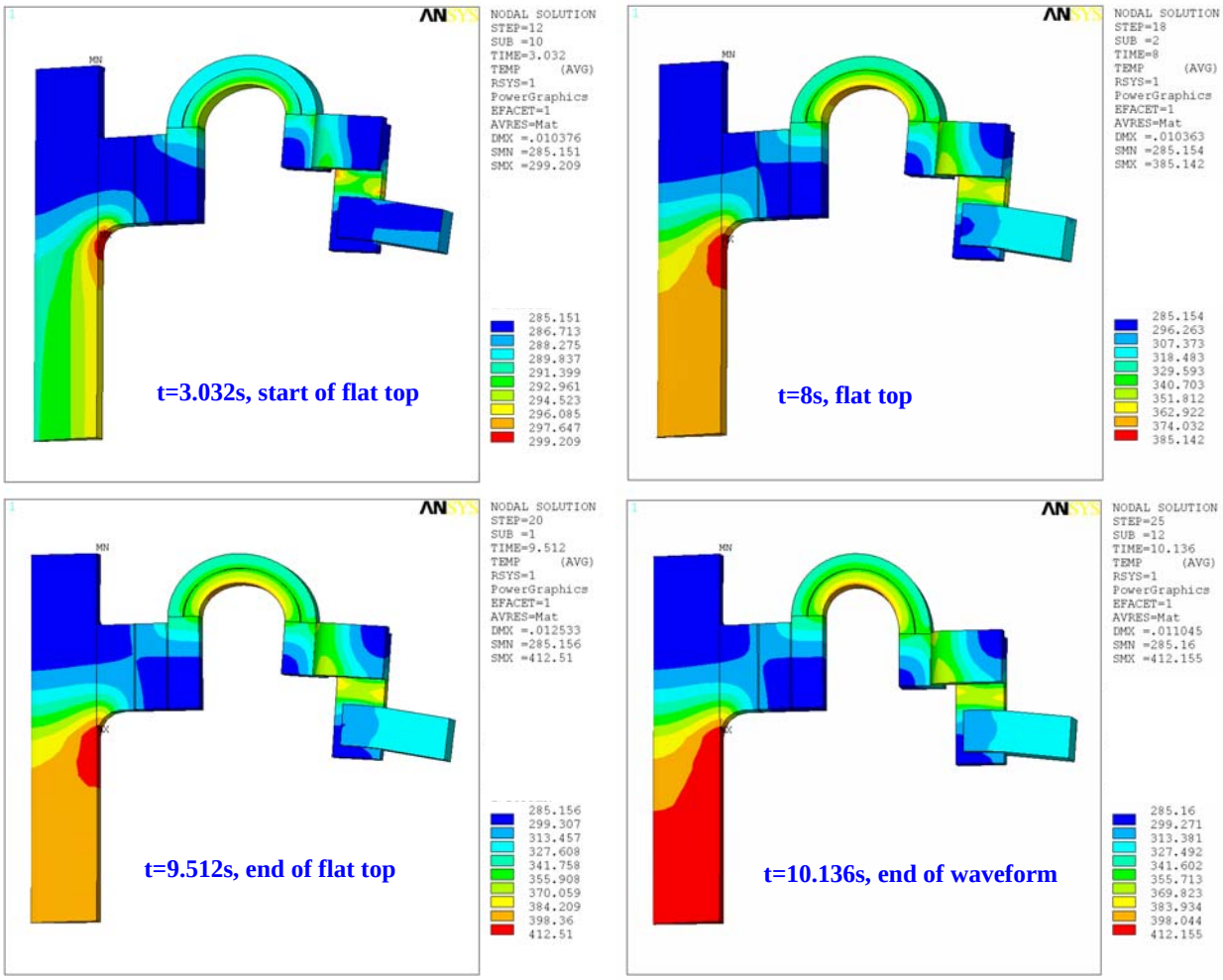

Coil deformation

Fig. 6 shows the deformation of the coil. Maximal radial deformation is 15.4mm (0.6”), theta deformation is <1mm and vertical deformation is 12.5mm (0.5”). The connection shape showed in Fig. 7 results in the theta deformation.

Figure 6: Coil deformation (m).

A. Radial deformation (m).

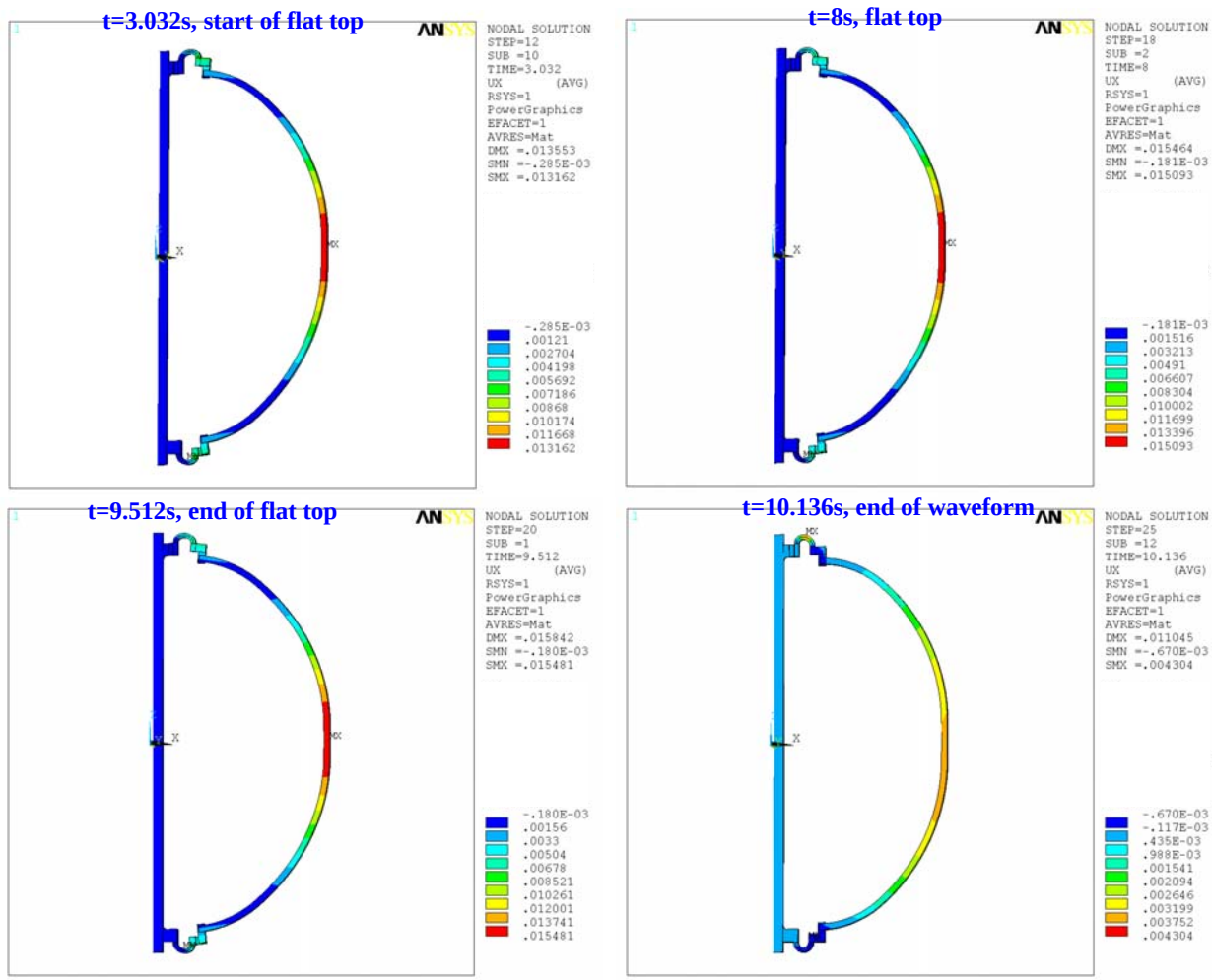

B. Theta deformation (m).

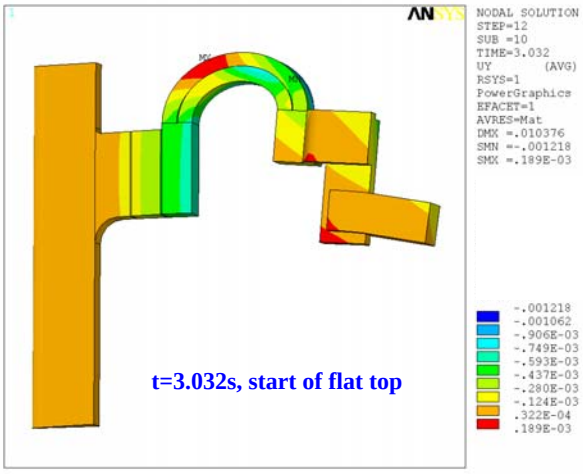

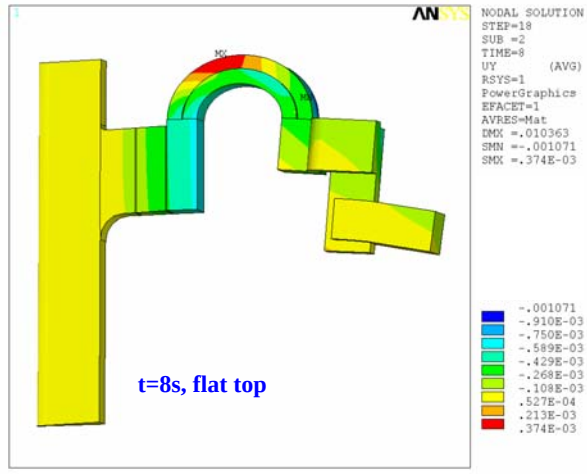

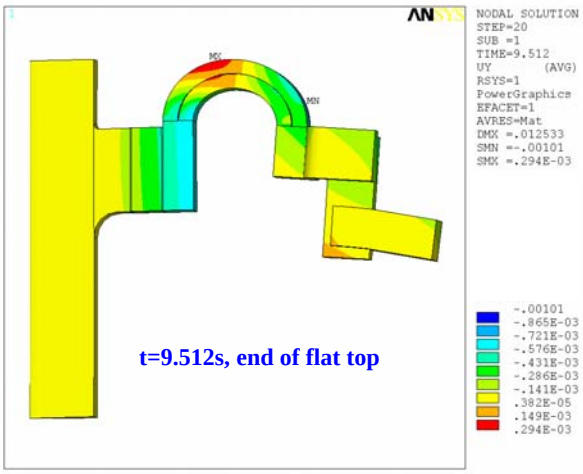

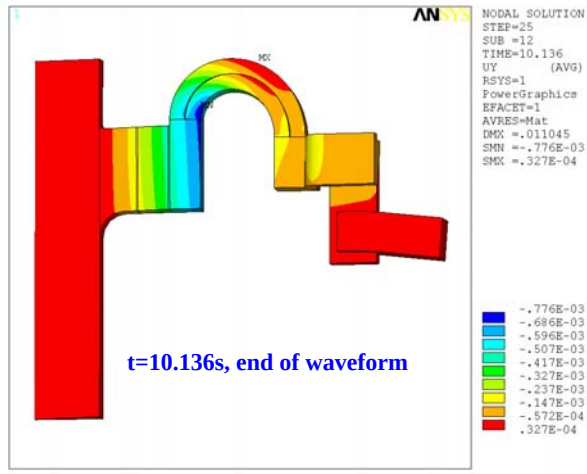

C. Vertical deformation (m).

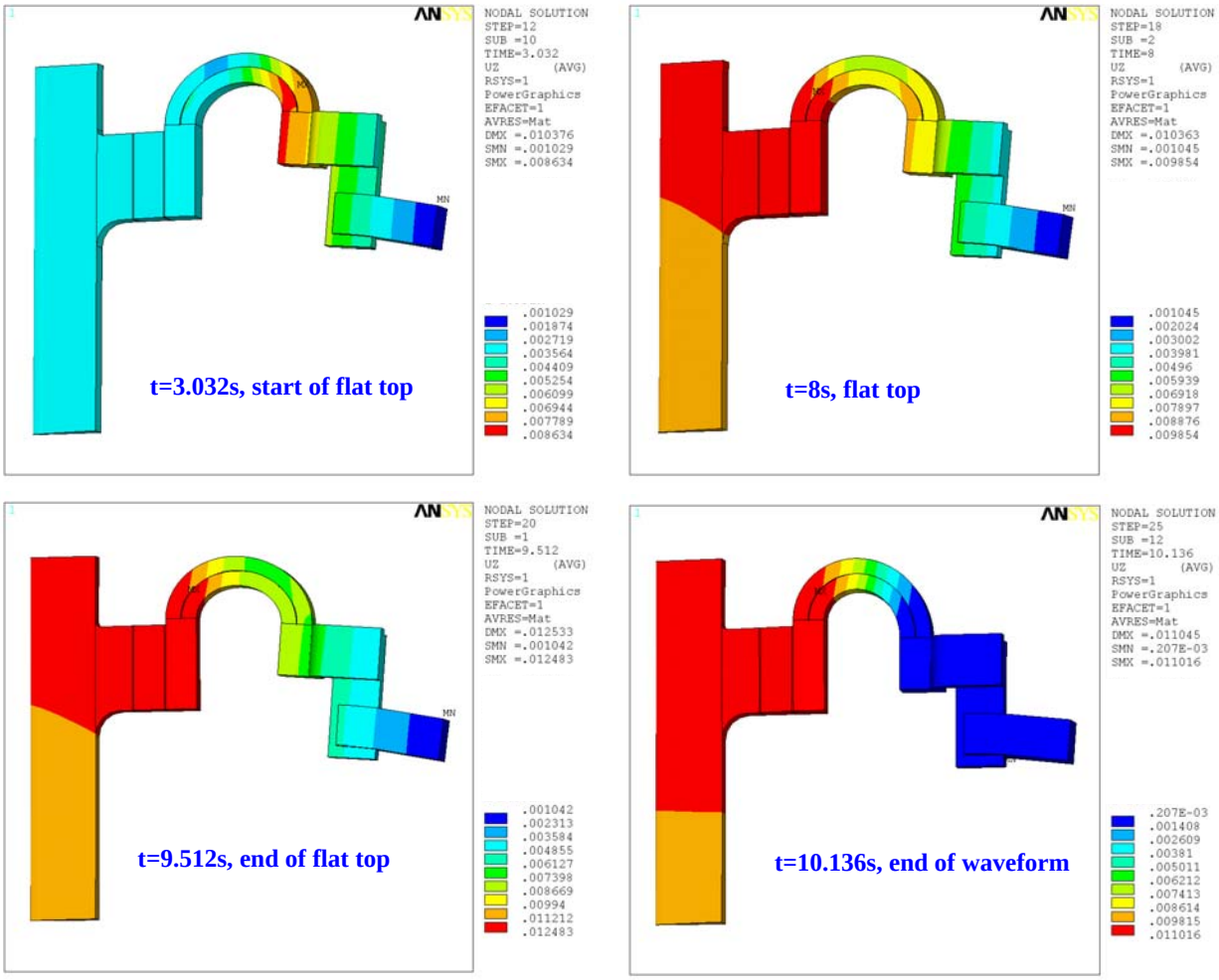

Figure 7: The connection shape results in the theta deformation.

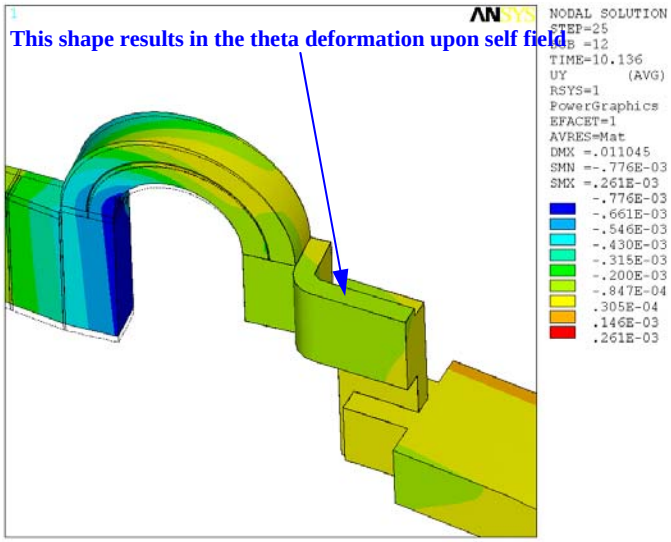

Coil stresses

Fig. 8 shows the Von Mises stress and Fig. 9 is a closer view. Maximal stress is 394 MPa (57 ksi). Changing the small fillet into a bigger one or removing the extension of inner leg may help to reduce this stress concentration but this requires further study.

Figure 8: Coil Von Mises stress (Pa)

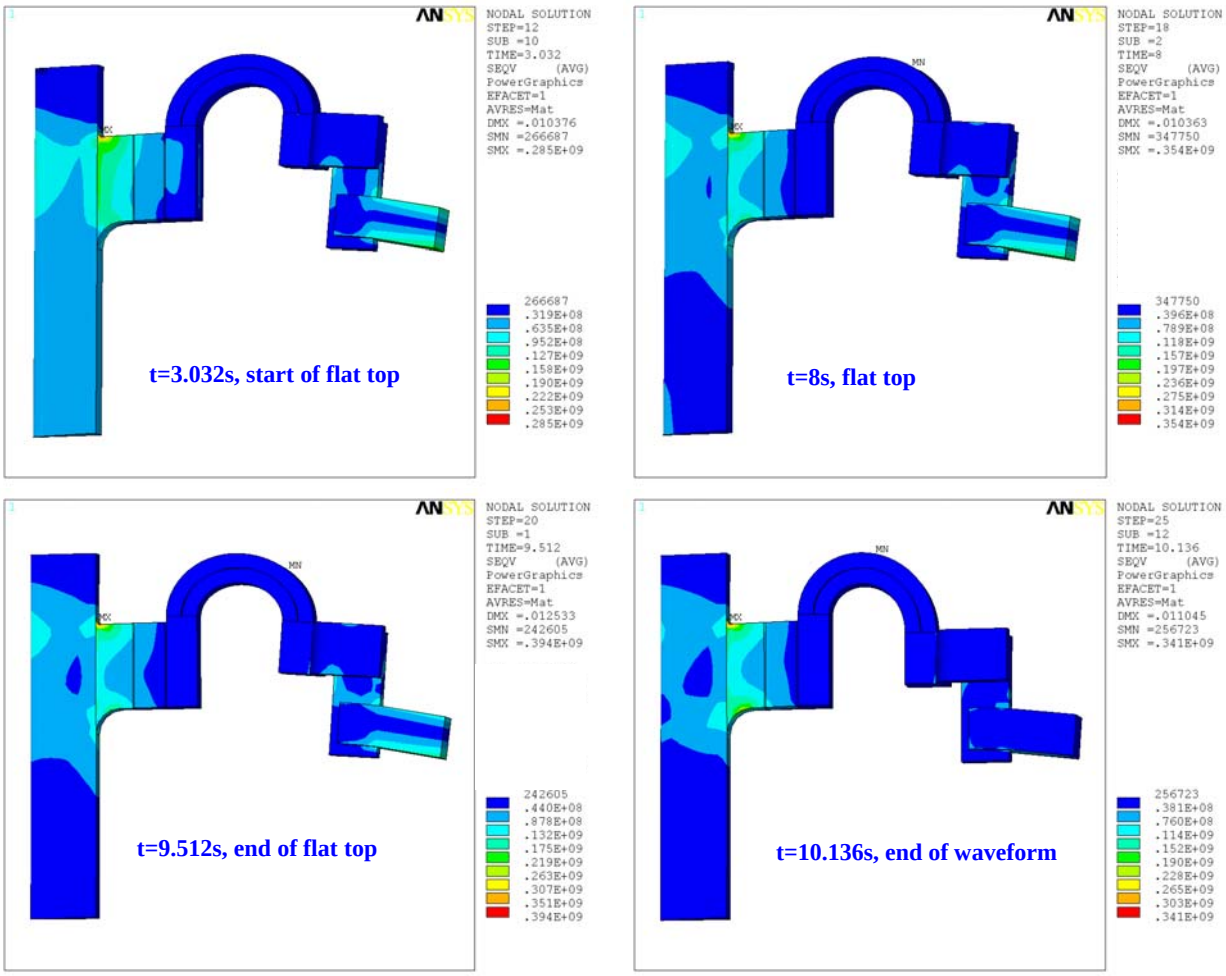

Figure 9: Close view of Von Mises stress (Pa).

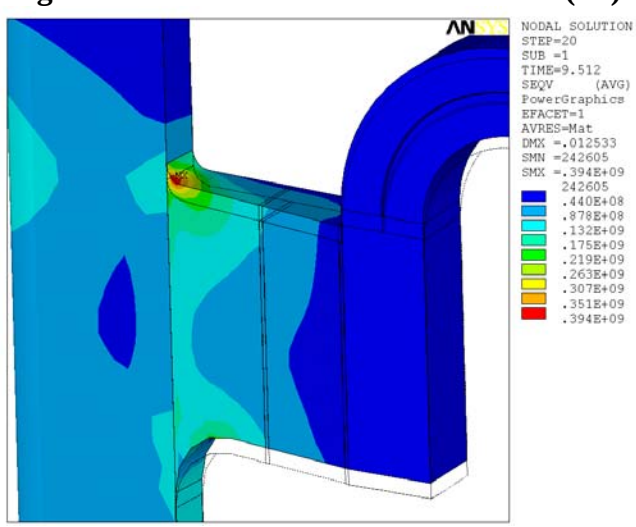

Fig. 10 shows the hoop stress in the upper part.

Figure 10: Hoop stress (Pa).

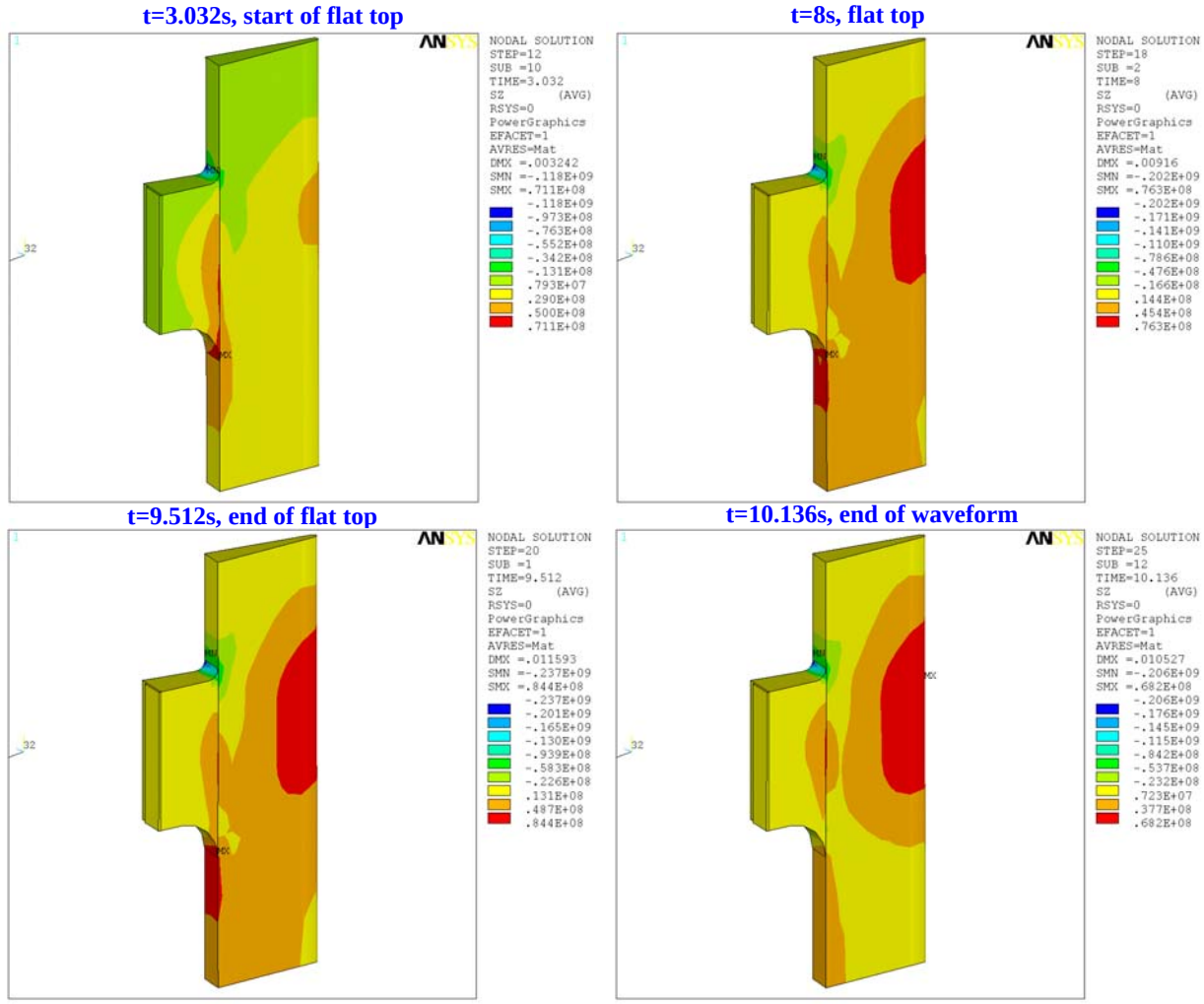

Current density and temperature in the arch

Each arch is modeled with two solid parts but with anisotropic material properties to simulate the straps. Fig. 11 shows the current density and Fig. 12 shows the temperature in the straps (maximal 117ºC).

Figure 11: Current density (A/m^2).

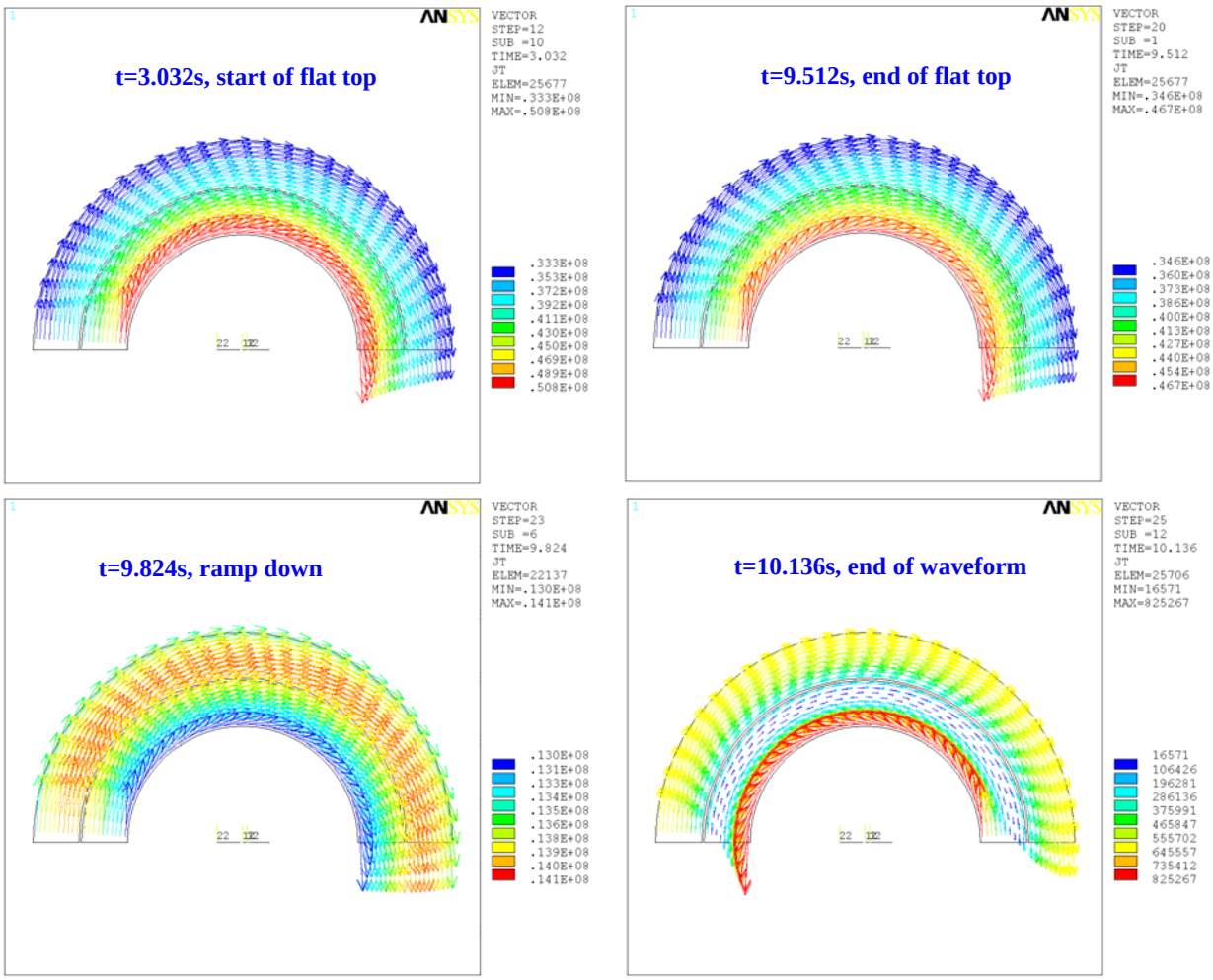

Figure 12: Temperature (K).

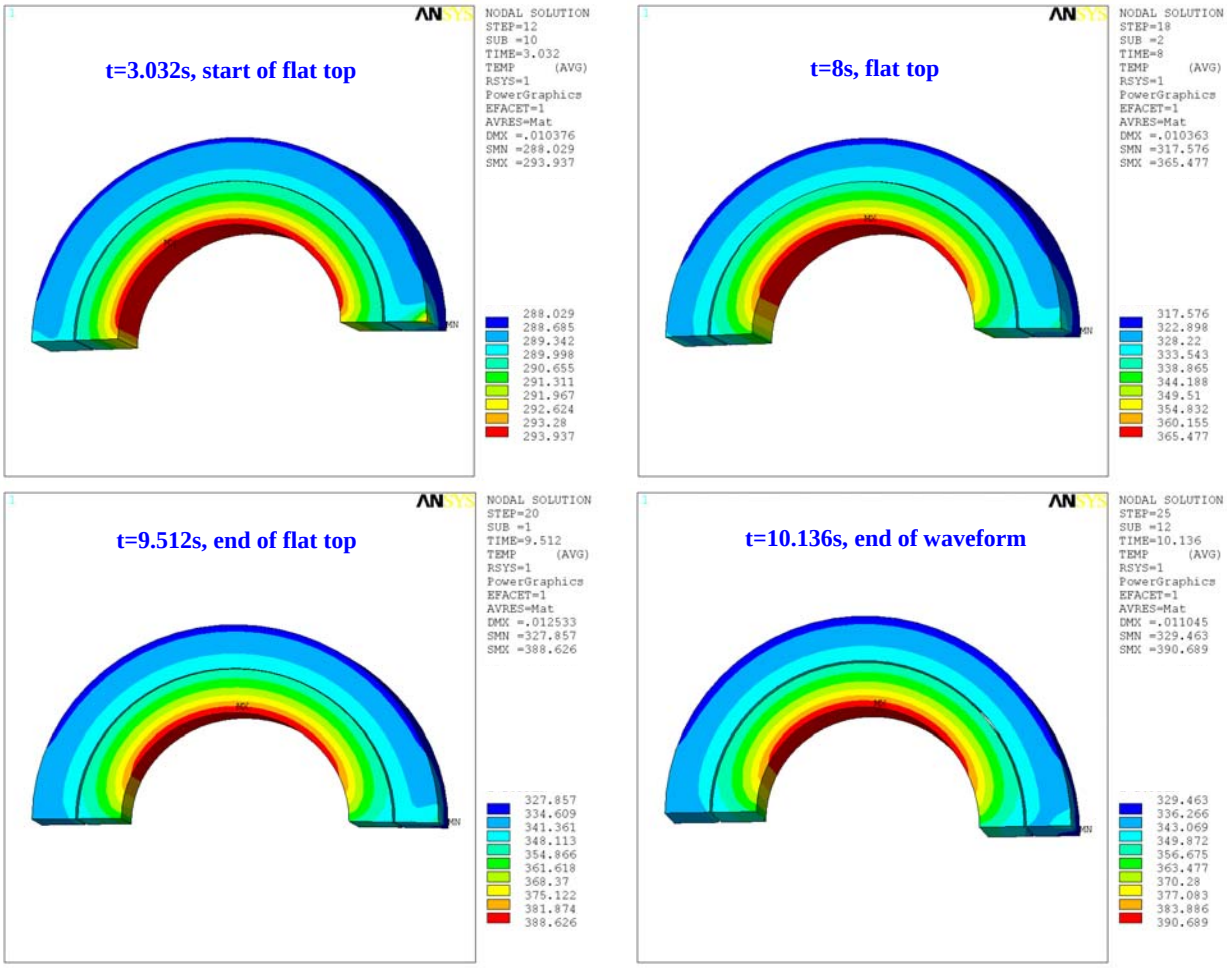

Contact pressure

Fig. 13 shows the stress in the contact regions. 30MPa (4.35ksi) pressure is given as shown in Fig. 13 as bolt pressure. The contact region close to arch can maintain adequate and uniform pressure. But the contact close to central beam has separation and requires more bolts pressure to maintain contact.
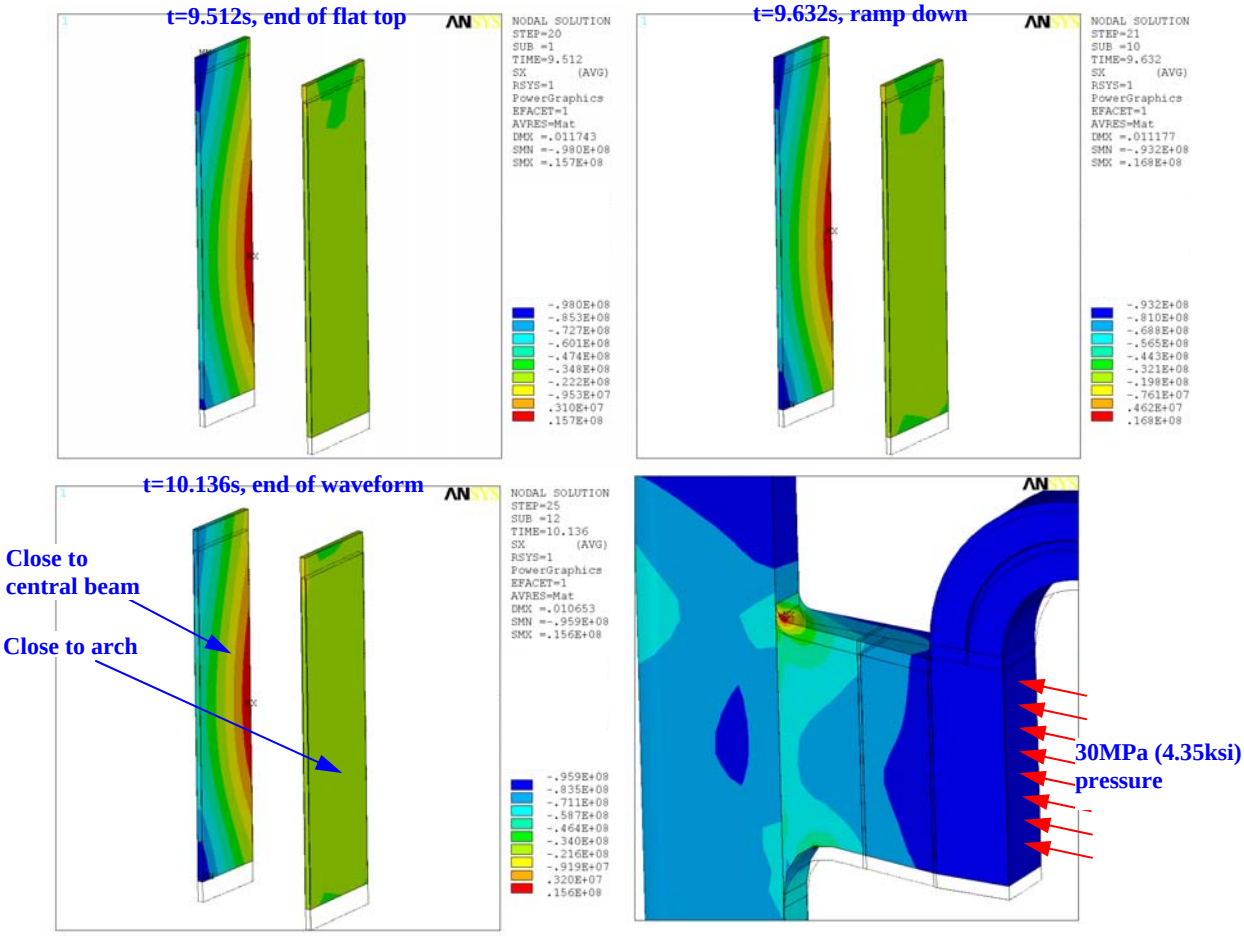
Figure 13: Stress in contact regions (Pa).